High Efficiency Condensing Boiler

spares & parts online
IBASIS.co.uk©

Saunier Duval

Instructions for use
Installation and servicing

Xeon

Xeon 18 HE	G.C. 41-920-38
Xeon 30 HE	G.C. 41-920-46

Guarantee Registration

Thank you for installing a new Saunier Duval appliance in your home.
Saunier Duval appliances are manufactured to the very highest standard so we are pleased to offer our customers a Comprehensive Guarantee.
This product is guaranteed for 24 months from the date of installation or 30 months from the date of manufacture, whichever is the shorter, for parts. In addition this product is guaranteed for 12 months from the date of installation or 18 months from the date of manufacture, whichever is the shorter, for labour.
The second year of the parts guarantee, from the beginning of the 13th month onwards after installation or manufacture, is conditional upon the boiler having been serviced by a CORGI registered gas installer,
in accordance with the manufacturer's recommendations. We strongly recommend regular servicing of your gas appliance, but where the condition is not met, any chargeable spare parts or components issued within the applicable guarantee period still benefit from a 12 month warranty from the date of issue by the manufacturer.

We recommend you complete and return as soon as possible your guarantee registration card.

If your guarantee registration card is missing you can obtain a copy or record your registration by telephoning the Saunier Duval Customer Service number below.

For customer service call:

01773 525 914

Technical helpline: 01773 828400

For General and Sales enquiries:

Tel. 0870 6064351

To register your Saunier Duval appliance call:

0800 073 2144

benchmark™ COLLECTIVE MARK

The code of practice for the installation, commissioning & servicing of gas central heating

Saunier Duval

Contents

The instructions consist of three parts, User, Installation and Servicing Instructions. The instructions are an integral part of the appliance and must, to comply with the current issue of the Gas Safety (Installation and Use) Regulations, be handed to the user on completion of the installation.

	Important Information	4
	Manual Handling	6
	Appliance Safety Devices - User Instructions	6
	Maintenance and Servicing - User Instructions	7
	Operating the Boiler	9
1	Technical Information	10
2	Boiler Location and Ventilation	13
3	Flue Location and Ventilation	14
4	Water System	17
5	Installation Preparation	21
5	Boiler Fixing	22
7	Gas, Water and Condensate Connections	23
8	Flue Preparation Telescopic and Standard	26
9	Electrical Connections	30
10	Commissioning	33
10	Commissioning - Instructions to the User	36
11	Servicing	37
12	Fault Finding	43
13	Replacement Parts	47
14	Spare Parts	53

WARNINGS

Gas Leak or Fault

Turn off the gas emergency control valve immediately. Eliminate all sources of ignition, i.e. smoking, blowlamps, hot air guns etc. Do not operate electrical lights or switches either on or off. Open all doors and windows, ventilate the area.

Sheet Metal Parts

This boiler contains metal parts (components) and care should be taken when handling and cleaning, with particular regard to edges.

Sealed Components

Under no circumstances must the User interfere with or adjust sealed parts.

IMPORTANT INFORMATION

Gas Category

This boiler is for use only on G20 natural gas, but the 30 HE may be converted for use on G31 gas (Propane L.P.G.).

Gas Safety (Installation and Use) Regulations

In your own interests and that of safety, it is the Law that ALL gas appliances are installed by a **competent person** in accordance with the current issue of the above regulations.

Testing and Certification

The boiler is tested and certificated for safety and performance. It is, therefore, important that no alteration is made to the boiler unless approved, in writing, by Saunier Duval. Any alteration not approved by Saunier Duval, could invalidate the certification, boiler warranty and may also infringe the current issue of the statutory requirements.

CE Mark

This boiler meets the requirements of Statutory Instrument, No. 3083 The Boiler (Efficiency) Regulations, and therefore is deemed to meet the requirements of Directive 92/42/EEC on the efficiency requirements for new hot water boilers fired with liquid or gaseous fuels.

Type test for purposes of Regulation 5 certified by: Notified body 0087.

Product/production certified by: Notified body 0086.

The CE mark on this appliance shows compliance with:

1. Directive 90/396/EEC on the approximation of the laws of the Member States relating to appliances burning gaseous fuels.

2. Directive 73/23/EEC on the harmonisation of the Laws of the Member States relating to electrical equipment designed for use within certain voltage limits.

3. Directive 89/336/EEC on the approximation of the Laws of the Member States relating to electromagnetic compatibility.

Control of Substances Hazardous to Health

Under Section 6 of The Health and Safety at Work Act 1974, we are required to provide information on substances hazardous to health.

The adhesives and sealants used in this appliance are cured and give no known hazard in this state.

Insulation Pads / Ceramic Fibre

These can cause irritation to skin, eyes and the respiratory tract.

If you have a history of skin complaint you may be susceptible to irritation. High dust levels are usual only if the material is broken.

Normal handling should not cause discomfort, but follow normal good hygiene and wash your hands before eating, drinking or going to the lavatory.

If you do suffer irritation to the eyes or severe irritation to the skin seek medical attention.

Electrical Supply

The boiler must be earthed.

All system components shall be of an approved type and all wiring to current I.E.E. wiring regulations.

External wiring must be correctly earthed, polarised and in accordance with the relevant standards.

In GB this is BS 6891.

In IE this is the current edition of I.S.813 "Domestic Gas Installations".

The boiler must be connected to a permanent 230V ac, 50Hz supply.

Connection of the whole electrical system of the boiler, including any heating controls, to the electrical supply must be through one common isolator and must be fused 3 Amp maximum.

Isolation should be by a double pole switched fused spur box, with a minimum gap of 3mm for both poles. The fused spur box should be readily accessible and preferably adjacent to the appliance. It should be identified as to its use.

Alternatively connection can be made through an unswitched shuttered socket and 3A fused 3-pin plug both to the current issue of BS 1363 may be used, provided they are not used in a room containing a bath or shower.

The colours of three core flexible cable are, blue - neutral, brown - live, green and yellow - earth.

General Note

This boiler is designed to provide central heating from a fully pumped open-vented or sealed water system with a fully indirect cylinder.

Once the controls are set the boiler operates automatically.

Please read these instructions and follow them carefully for the correct installation and economical use of your boiler.

Water Treatment

In the case of an existing installation, it is **ESSENTIAL** that prior to installing the new boiler the system is thoroughly flushed. For optimum performance after installation of a new system, the boiler and its associated central heating system should also be flushed. Flushing should be carried out in accordance with BS7593: 1992 using a cleanser such as Sentinel X300 or X400, Fernox Superfloc or Salamander corrosion guard cleaner.

For long-term corrosion protection, after flushing, an inhibitor suitable for stainless steel exchangers should be used, refer to the current issue of BS 5449 and BS 7593 on the use of inhibitors in central heating systems. Examples are Sentinel X100 Fernox or Salamander corrosion guard inhibitor.

Compartment or Cupboard Installations

If the boiler is fitted into a compartment or cupboard it does not require ventilation openings.

Do not use the compartment or cupboard for storage.

Clearances

If fixtures are positioned close to the boiler, space must be left as shown in diagram 2.1. Enough space must also be left in front of the boiler to allow for servicing.

Condensate Drain

The condensate drain, see section 7.3, must not be modified or blocked.

Pluming from flue terminal

Like all condensing boilers this appliance will produce a plume of condensation from the flue terminal in cool weather. This is due to the high efficiency and hence low flue gas temperature of the boiler. It is normal and not a fault indication.

Cleaning

The boiler casing can be cleaned using a mild liquid detergent with a damp cloth, then a dry cloth to polish.

Do not use any form of abrasive or solvent cleaner as you may damage the paintwork.

Electrical Supply

If the mains electricity and gas are to be turned off for any long periods during severe weather, it is recommended that the whole system, including the boiler, should be drained to avoid the risk of freezing. Make sure that, if fitted, the immersion heater in the cylinder is switched off.

NOTE: If you have a sealed water system contact your installation/servicing company as draining, refilling and pressurising MUST be carried out by a **competent person**.

MANUAL HANDLING

IMPORTANT: With regards to the Manual Handling Operations, 1992 Regulations, the following lift operation exceeds the recommended weight for a one man lift.

General recommendations when handling

Clear the route before attempting the lift.

Ensure safe lifting techniques are used – keep back straight – bend using legs.

Keep load as close to body as possible.

Do not twist – reposition feet instead.

If 2 persons performing lift, ensure co-ordinated movements during lift.

Avoid upper body/top heavy bending - do not lean forward/sideways.

Recommend wear suitable cut resistant gloves with good grip to protect against sharp edges and ensure good grip.

Always use assistance if required.

APPLIANCE SAFETY DEVICES - USER INSTRUCTIONS

Electrical Supply Failure Reset Switch

The boiler will not work without an electrical supply.

Normal operation of the boiler should resume when the electrical supply is restored.

Reset any external controls, to resume normal operation of the central heating.

If the boiler does not resume normal operation turn the mains reset switch off and on. If the boiler does not resume normal operation after this the overheat stat may have operated.

Overheating Safety

In the event of the boiler overheating the safety devices will cause a safety shutdown. If this happens, call your Installation/Servicing company.

Frost Protection

The appliance has a built in frost protection programme as long as the electricity and gas are left switched on.

This device operates the burner and system pump when the temperature inside the boiler falls to 3°C.

Any other exposed areas of the system should be protected by a separate frost thermostat.

Condensate Drain Blockage

As a safety feature the boiler will stop working if the condensate drain becomes blocked. During freezing conditions this may be due to the forming of ice in the condense drain external to the house. Release an ice blockage by the use of warm cloths on the pipe. The boiler should then restart. Contact your installation/servicing company if the fault persists.

MAINTENANCE AND SERVICING - USER INSTRUCTIONS

For the continued efficient and safe operation of the boiler it is recommended that it is checked and serviced at regular intervals. The frequency of servicing will depend upon the installation conditions and usage, but in general, once a year should be enough.

If this appliance is installed in a rented property in the UK there is a duty of care imposed on the owner of the property by the current issue of the Gas Safety (Installation and Use) Regulations, Section 35.

Servicing/maintenance should be carried out by a **competent person** in accordance with the rules in force in the countries of destination.

To obtain service, please contact Saunier Duval's own service organisation using the telephone number on the front cover of this booklet.

Please be advised that the installation engineer on completion of commissioning and servicing should complete the Benchmark logbook.

All CORGI Registered Installers carry a CORGI ID card, and have a registration number. Both should be recorded in your boiler Logbook. You can check your installer is CORGI registered by calling CORGI direct on: - 01256 372300.

Spare Parts

REMEMBER: When replacing a part on this appliance, use only spare parts that you can be assured conform to the safety and performance specification that we require. Do not use reconditioned or copy parts that have not been clearly authorised by Saunier Duval.

If replacement parts are required contact Saunier Duval's own service organisation using the telephone number on the front cover of this booklet.

Please quote the name of the appliance, this information will be on the name badge on the front of the appliance.

If in doubt seek advice from Saunier Duval's own service organisation using the telephone number on the inside front cover of this booklet.

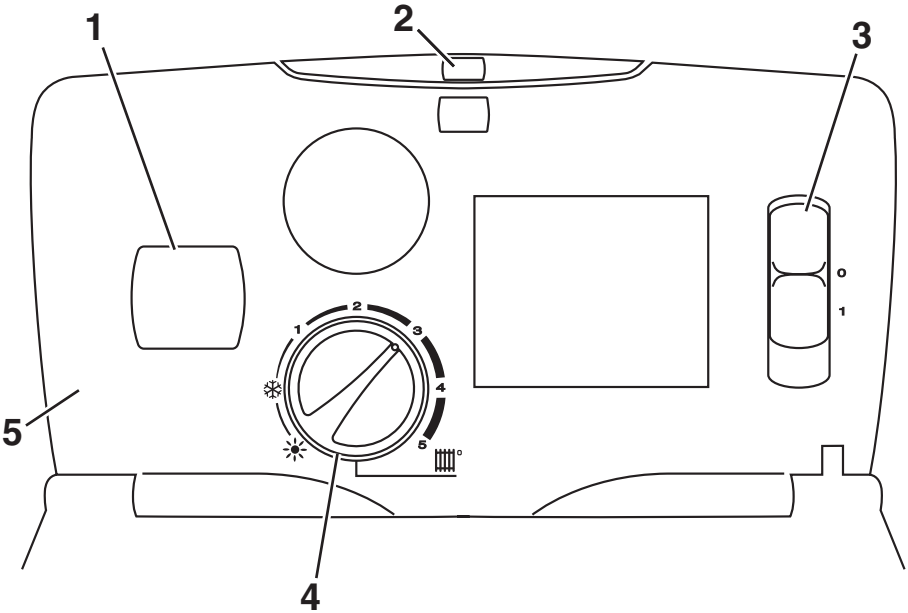

1. **Digital Display**
2. **Control Light**
3. **Mains Reset Switch**
4. **Central Heating Water Temperature Control Knob**
5. **Controls Fascia**

Diagram 1

Operation of the Boiler

Sealed Water Systems

CAUTION: A sealed water system must be filled and pressurised by a **competent person**.

Only light the boiler when you are sure that the system and boiler have been filled and pressurised.

The pressure should read at least 0.7 bar, anything less than this figure could indicate a leak and you **MUST** contact your installer or Saunier Duval's own Customer Care Line using the telephone number on page two of this booklet. **Do not operate the boiler without water.**

All Systems

Check that the electrical supply to the boiler is ON at the external isolator.

Set any remote controls as required.

User Controls

• Slide the mains reset switch to the ON position (I).

The control light will illuminate (green) indicating the boiler is lit, diagram 1.

• The temperature of the central heating water can be adjusted by turning the central heating water temperature control knob

to desired setting between ❄ 'Min' and 'Max', diagram 1.

'Max' is approximately 82°C (180°F)

The digital display, diagram 1, shows the temperature of the appliance when the appliance is running and in standby.

A fault is indicated by a RED flashing control light and flash fault code on digital display.

To Reset

• Slide the mains reset switch to 0. Wait for 5 seconds.

Slide mains reset switch to I.

If the fault persists contact your installer/service provider.

It should be noted that this is a fan flue appliance and fan operation may be heard.

To Turn the Boiler Off

• There is a mains reset switch on the right hand side of the controls fascia.

However, it is preferable to leave the electrical supply on whenever possible to permit operation of the built-in frost protection.

1 TECHNICAL INFORMATION

1.1 Important Notice

The boiler is supplied in one carton, which includes a fittings and documentation pack.

This boiler is for use only on **G20 NATURAL GAS**, but the 30 HE may be converted for use on G31 gas (Propane L.P.G.).

Where no British Standards exists, materials and equipment should be fit for their purpose and of suitable quality and workmanship.

The installation of this boiler must be carried out by a **competent person** in accordance the rules in force in the countries of destination.

1.2 Statutory Requirements

The appliance is suitable only for installation in GB and IE and should be installed in accordance with the rules in force.

In GB the installation of the boiler must be carried out by a **competent person** as described in the following regulations:

The manufacturer's instructions supplied.

The Gas Safety (Installation and Use) Regulations.

The appropriate Buildings Regulations either The Building Regulations, The Building Regulations (Scotland), The Building Regulations (Northern Ireland).

The Water Fittings Regulations or Water byelaws in Scotland.

The Health and Safety at Work Act, Control of Substances Hazardous to Health (COSHH).

The Current I.E.E. Wiring Regulations.

Where no specific instructions are given, reference should be made to the relevant British Standard Code of Practice.

In IE, the installation must be carried out by a **competent person** and installed in accordance with the current edition of I.S.813 "Domestic Gas Installations", the current Building Regulations and reference should be made to the current ETCI rules for Electrical Installation.

In GB the following Codes of Practice apply:

BS4814, BS6798, BS5440 Part 1 and 2, BS5546 Part 1, BS5449, BS6891, BS6700, BS7074 Part 1 and 2, BS7593, BS7671.

In IE: I.S.813, BS5546, BS 5449, BS 7074, BS 7593.

Manufacturer's instructions must not be taken as overriding statutory requirements.

NOTE: For further information, see the current issue of the Building Regulations, approved document L1 (in the UK) and the references:

1) GIL 59, 2000: Central heating system specification (CheSS) and

2) GPG 302, 2001: Controls for domestic central heating system and hot water. BRECSU.

Certification

This boiler certificated to the current issue of EN 483 for performance and safety.

It is important that no alteration is made to the boiler, without permission, in writing, from Saunier Duval.

Any alteration that is not approved by Saunier Duval, could invalidate the warranty and could also infringe the current issue of the Statutory Requirements.

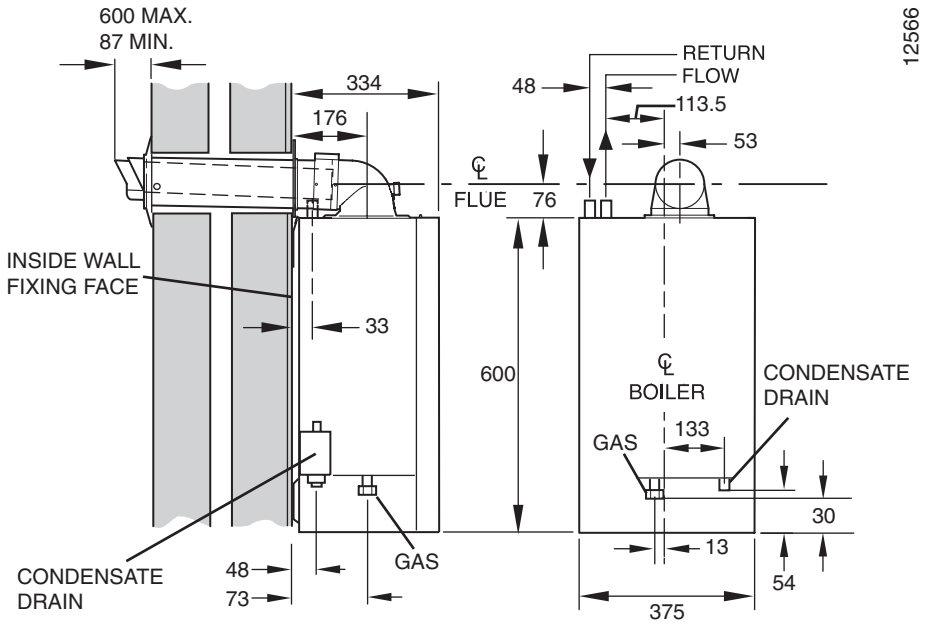

Diagram 1.1

1.3 Gas Supply

The gas installation shall be in accordance with the relevant standards.

In GB this is BS6891.

In IE this is the current edition of I.S.813 "Domestic Gas Installations".

The supply from the governed meter must be of adequate size to provide a steady inlet working pressure of 20mbar (8in wg) (Propane G31, 37mbar) at the boiler.

On completion, test the gas installation for soundness using the pressure drop method and suitable leak detection fluid, purge in accordance with the above standard.

TABLE 1	
TOTAL WEIGHT	18 HE = 31 kg 30 HE = 33 kg
GAS CONNECTION	Rc1/2in. (1/2in. BSPT)
WATER CONNECTION	22mm. copper
ELECTRICITY SUPPLY	23V~50HZ FUSED 3A
ELECTRICAL RATING	60W
INTERNAL FUSE RATE	MAIN PCB 630mAT

1.4 Technical Data

All dimensions are given in millimetres (except as noted).

See diagram 1.1 and Tables 1 and 2.

The data label is positioned on the inner door, refer to diagram 1.2.

The Seasonal Efficiency Domestic Boilers UK (SEDBUK) is: All HE boilers: Class 'A'.

The value is used in the UK Government's Standard Assessment Procedure (SAP) for energy rating of dwellings. The test data from which it has been calculated has been certified by B.S.I.

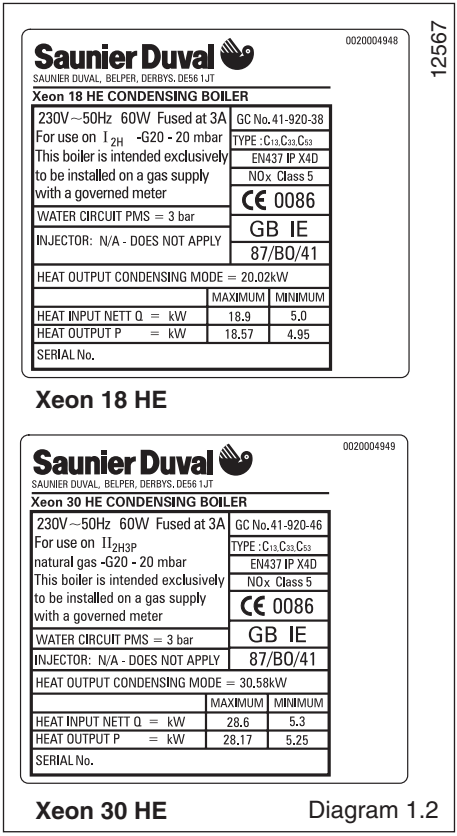

Diagram 1.2

TABLE 2	
18 HE	
BURNER $\%CO_2$ Case Off BURNER $\%CO_2$ Case On	9.1 + 0.2 - 0.5 9.3 + 0.3 - 0.5
	MIN. MAX.
APPROXIMATE GAS RATE (after 10 mins. from cold) m^3/h ft^3/h	0.53 2.0 18.7 70.06
30 HE	
BURNER $\%CO_2$ Case Off BURNER $\%CO_2$ Case On	9.1 + 0.2 - 0.5 9.3 + 0.3 - 0.5
	MIN. MAX.
APPROXIMATE GAS RATE (after 10 mins. from cold) m^3/h ft^3/h	0.56 3.02 19.8 107
30 HE LPG	
BURNER $\%CO_2$ Case Off BURNER $\%CO_2$ Case On	10.5 + 0.3 - 0.7 10.7 + 0.3 - 0.7
	MIN. MAX.
APPROXIMATE GAS RATE (after 10 mins. from cold) m^3/h ft^3/h	0.56 3.02 19.8 107

1.5 Condensate Drain

A plastic drain pipe must be fitted to allow discharge of condensate to a drain.

Condensate should, if possible, be discharged into the internal household draining system. If this is not practical, discharge can be made externally into the household drainage system or a purpose designed soak away, see Section 7.3 for more detail.

2 BOILER LOCATION AND VENTILATION

2.1 Boiler Location

This boiler is not suitable for outdoor installation.

This boiler may be installed in any room, although particular attention is drawn to the installation of a boiler in a room containing a bath or shower where reference must be made to the relevant requirements.

This boiler is suitable for installation in bathroom zones 2 and 3.

In GB this is the current I.E.E. WIRING REGULATIONS and BUILDING REGULATIONS.

In IE reference should be made to the current edition of I.S.813 “Domestic Gas Installations” and the current ETCI rules.

The boiler must be mounted on a flat wall, which is sufficiently robust to take its total weight, see Table 1. Section 1.

2.2 Clearances

The boiler should be positioned so that at least the minimum operational and servicing clearances are provided, see diagram 2.1.

Additional clearances may be beneficial around the boiler for installation and servicing.

For flue installations where external access is not practicable, consideration should be given for the space required to insert the flue internally, which may necessitate clearance larger than those specified in diagram 2.1.

2.3 Timber Frame Buildings

If the boiler is to be installed in a timber frame building it should be fitted in accordance with the Institute of Gas Engineers document IGE/UP/7/1998. If in doubt seek advice from the local gas undertaking or Saunier Duval.

2.4 Room Ventilation

The boiler is room sealed, so when it is installed in a room or space, a permanent air vent is not required.

2.5 Compartment Ventilation

Due to the high efficiency and hence low casing temperature of this boiler, cupboard or compartment ventilation is not necessary.

Leave existing air vents.

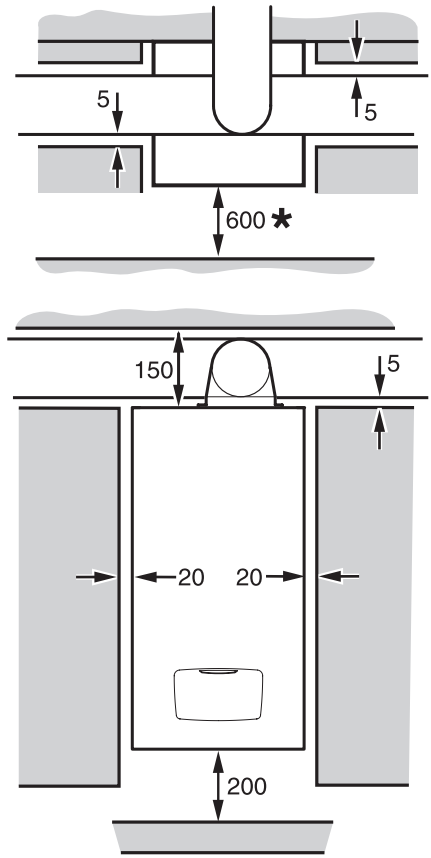

✱ **A removable compartment door can be placed at least 5mm. in front of the applianc**

Diagram 2.1

12567

Installation and servicing instructions strictly reserved for qualified gas installers

3 FLUE LOCATION AND VENTILATION

3.1 Flue Position and Length

The maximum permissible horizontal flue length is 10 metres plus the flue terminal, this can be achieved by use of the accessories, however should additional 90° or 2 x 45° elbows be used then the length MUST be reduced by 1 metre.

The diagrams 3.1 to 3.4 describe the lengths achievable without the use of extensions or elbows.

An elevated flue system can be installed with the addition of a vertical flue adapter, extension kits, and elbow, see section below, Flue Options.

When extension pipes are used the flue system must be designed to have a continuous fall to the boiler of at least (44mm for every 1M) to allow condensate to run out via the drain.

3.2 Internal Flue Installation

The flue can be installed from inside the building when access to the outside wall face is not practicable.

3.3 Flue Options

There are various flue systems to choose from, as follows:

Horizontal telescopic flue pack
- Pt. No. A2045000

Standard flue pack
- Pt. No. A2044900

Black terminal
- Pt. No. A2045100

Telescopic flue extension 0.5-0.8m
- Pt. No. A2032800

Vertical flue adaptor - Pt. No. A2045100

Vertical flue terminal kit - Pt. No. A2032300

2 Metre Extension Kit - Pt. No. A2032700

1 Metre Extension Kit - Pt. No. A2032600

0.5 Metre Extension Kit - Pt. No. A2032500

Adjustable Flue Pipe 0-50 mm
Kit - Pt. No. A2033100

45° Flue Bend Pack - Pt. No. A 2033000

90° Flue Bend Pack - Pt. No. A 2032900

Additional accessories are available.

See “Flue Options Guide” for configurations available.

12744

*NOTE. If necessary, it is permitted to increase this dimension up to 600mm max.

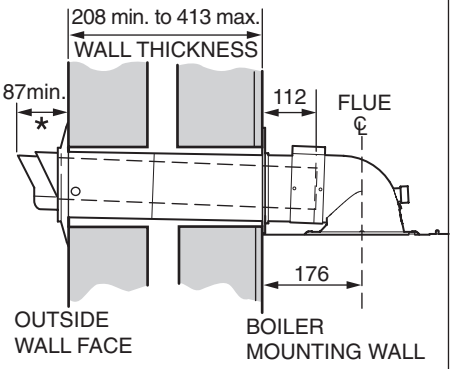

Top rear flue - telescopic Diagram 3.1

12746

*NOTE. If necessary, it is permitted to increase this dimension up to 600mm max.

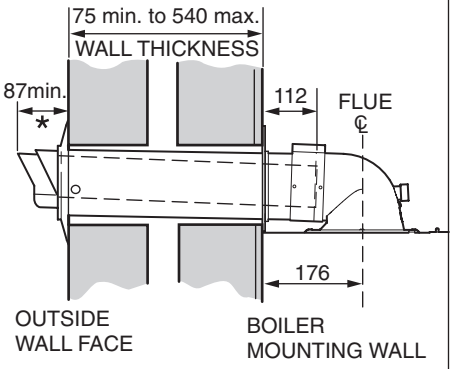

Top rear flue - standard Diagram 3.3

12745

* NOTE. If necessary, it is permitted to increase this dimension up to 600mm max

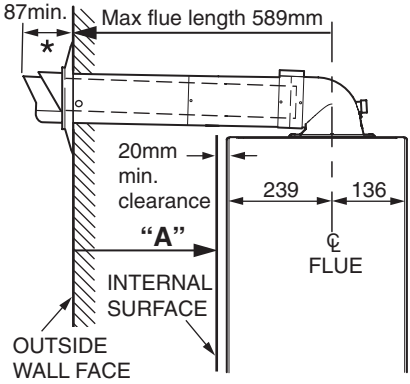

"A"	
Max. distance from outside wall face to min clearance. LH - 330mm RH - 433mm	Min. distance from outside wall face to min clearance. LH - 125mm RH - 228mm

Top side flue - telescopic Diagram 3.2

12747

* NOTE. If necessary, it is permitted to increase this dimension up to 600mm max.

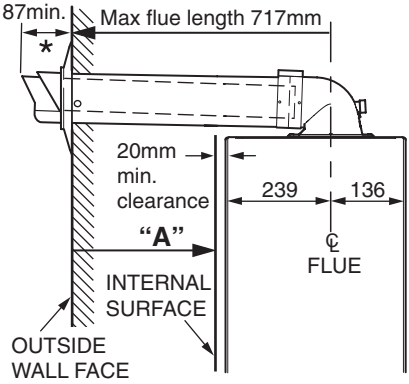

"A"	
Max. distance from outside wall face to min clearance. LH - 458mm RH - 561mm	Min. distance from outside wall face to min clearance. LH - 75mm RH - 75mm

Top side flue - standard Diagram 3.4

3.4 Terminal Position

The minimum acceptable siting dimensions for the terminal from obstructions, other terminals and ventilation openings are shown in diagram 3.5. Dimensions shown are measured from edge of terminal.

The terminal must be exposed to the external air, allowing free passage of air across it at all times.

Being a condensing boiler some pluming may occur from the flue outlet. This should be taken into consideration when selecting the position for the terminal.

NOTE: If necessary it is permitted to increase the terminal protrusion through the outside wall to greater than the minimum dimension of 87mm but no more than 600mm, see diagram 1.1.

F‡ and L‡ See diagram 3.5 . Carports or similar extensions of a roof only, or a roof and one wall, require special consideration with respect to any openings, doors, vents or windows under the roof. Care is required to protect the roof if made of plastic sheeting. If the carport comprises of a roof and two of more walls, seek advice from the local gas supply company before installing the boiler.

H* and J* See diagram 3.5 . These dimensions comply with the building regulations, but they may need to be increased to avoid wall staining and nuisance from pluming depending on site conditions.

Plume Diverter Kit: Part No. A2045400 can be used to overcome many site issues.

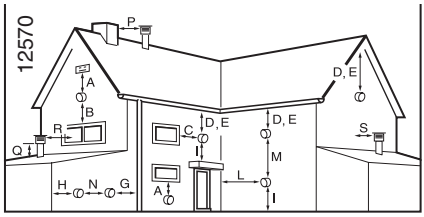

UNDER CAR PORT etc.

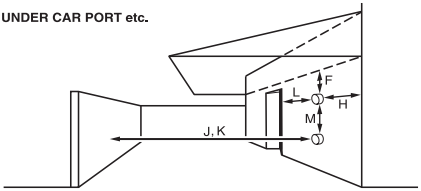

	Minimum siting dimensions for fanned flue terminals	MM
	Horizontal Flues	
A	Directly below an opening, air brick, opening windows.	300
B	Above an opening air brick, opening windows.	300
C	Horizontally to an opening, air brick opening window.	300
D	Below gutter, drain soil pipe.	25
E	Below eaves.	25
F‡	Below a balcony or car port.	25
G	From vertical drain pipes, soil pipes.	25
H	From internal / external corners.	25
H*	To a boundary alongside the terminal.	300
I	Above adjacent ground or balcony.	300
J*	From surface or a boundary facing the terminal.	600
K	Facing the terminals.	1200
L‡	From opening (door / window) in car port into dwelling.	1200
M	Vertical from a terminal.	1500
N	Horizontally from a terminal.	300
	Vertical Flues	
P	From another terminal.	600
Q	Above roof level.	300
R	From adjacent opening window.	1000
S	From adjacent wall to flue.	300

Diagram 3.5

3.5 Terminal Guard

A terminal guard is required if persons could come into contact with the terminal or the terminal could be subject to damage.

If a terminal guard is required, it must be positioned to provide minimum of 50mm clearance from any part of the terminal and be central over the terminal.

The guard should be similar to that shown in diagram 3.6.

A suitable guard is manufactured by:

Tower Flue Components

Morley Rd.

Tonbridge

Kent

TN9 1RA

Size: 280mm x 280mm x 270mm.

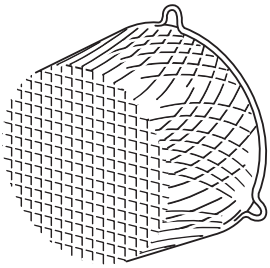

Terminal Guard Diagram 3.6

4 WATER SYSTEM

4.1 Draining Tap

A draining tap must be provided at the lowest point of the system, which will allow the entire system and hot water system to be drained.

Draining taps shall be to the current issue of BS 2879.

4.2 Safety Valve

A safety valve need not be fitted to an open-vented system.

4.3 Pump

The pump should be fitted on the flow pipe from the boiler and have isolating valves each side.

A variable duty pump should be set to give a temperature difference of no greater than 20°C between the flow and return, with the thermostat set at “MAX”, which is about 80°C, to give a flow rate as shown in table 3.

See chart for pressure loss of the boiler, diagram 4.1.

High resistance microbore systems may require a higher duty pump.

4.4 Flow Rate

If it is necessary to alter the flow rate, the system can be fitted with a lockable balancing valve in the main flow or return pipes shown as valve “A” in diagram 4.3. The flow rate through the boiler must not be allowed to fall below that given in Table 3.

TABLE 3 FLOW RATE	
MODEL	MINIMUM FLOW RATE
18 HE	777.8 LITRES/HR
30 HE	1220 LITRES/HR
This is equal to 20°C differential at maximum heat input	

Installation and servicing instructions strictly reserved for qualified gas installers

12572

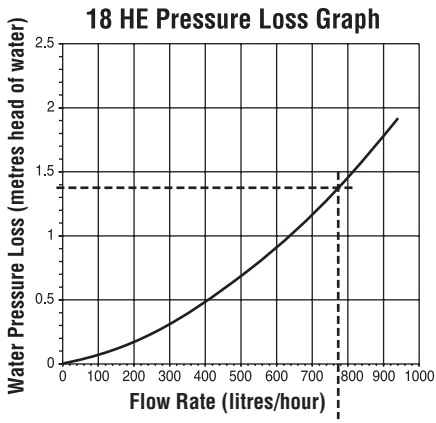

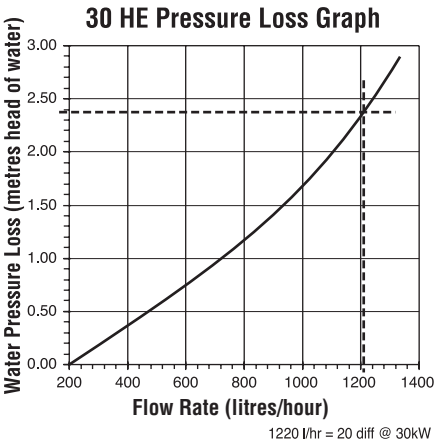

Diagram 4.1

4.5 Bypass

A bypass is not required on the central heating system unless the system controls could allow the boiler and pump to operate when there is no flow.

Where a bypass has to be fitted, the bypass must be placed at least 1.5 metres away from the boiler.

4.6 Water Treatment

In the case of an existing installation, it is **ESSENTIAL** that prior to installing the new boiler the system is thoroughly flushed. For optimum performance after installation of a new system, the boiler and its associated central heating system should also be flushed. Flushing should be carried out in accordance with BS7593: 1992 using a cleanser such as Sentinel X300 or X400, or Fernox Superfloc.

For long-term corrosion protection, after flushing, an inhibitor suitable for stainless steel exchangers should be used, refer to the current issue of BS 5449 and BS 7593 on the use of inhibitors in central heating systems. Examples are Sentinel X100 and Fernox.

12573

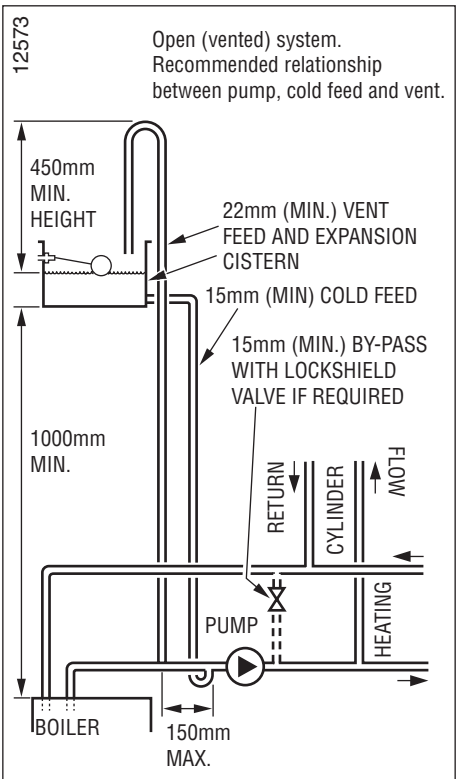

Diagram 4.2

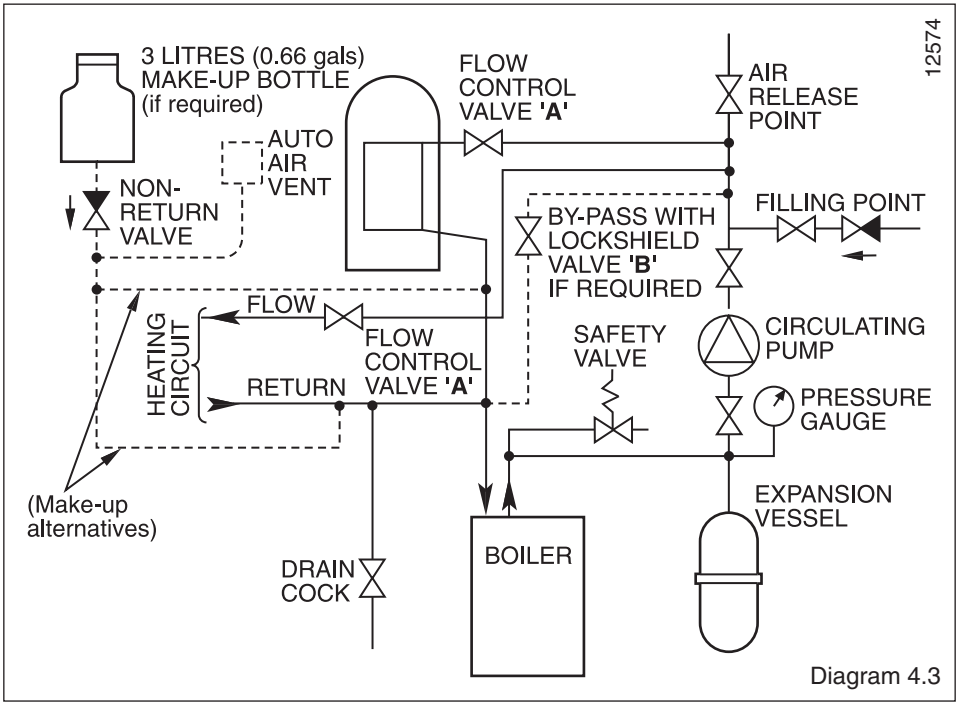

Diagram 4.3

4.7 Open (Vented) Water System

The boiler must be supplied from an unrestricted water supply taken from a feed and expansion cistern situated at a maximum height of 27 metres (90ft) above the boiler.

The cold feed must be 15mm minimum size.

The vent must rise continuously and be unrestricted.

It is important that the relative positions of the pump, cold feed and open vent are as shown in diagram 4.2.

4.8 Combined Feed and Vent

For combined feed and vent, a 22mm pipe must be fitted in accordance with BS 5449.

4.9 Domestic Hot Water Cylinder

SINGLE FEED INDIRECT CYLINDERS ARE NOT SUITABLE

The domestic hot water cylinder must be of the double feed fully indirect coil type.

4.10 Domestic Hot Water System - unvented

General - All domestic hot water circuits, connections, fittings must be in accordance with the relevant standards and water supply regulations.

For GB: Guidance G17 to G24 and recommendation R17 to R24 of the Water Regulations Guide.

For IE: The current edition of I.S.813 “Domestic Gas Installations”.

Where a storage system will not have a vent to atmosphere the installation must comply with the building regulations and local Water Company bylaws, see also the current issue of BS5546 and BS6700.

If fitting to an existing system the local authority should be informed.

4.11 Sealed water Systems

The installation must comply with the appropriate requirements of the current issue of BS4814, BS5449, BS6759, BS6798 and BS7074 Part 1 and 2.

See diagram 4.3 for a suggested layout.

4.12 Safety Valve

A safety valve must be fitted to a sealed system.

It shall be preset, non-adjustable with a lift pressure of 3 bar, incorporating seating of a resilient material, a test device and a connection for drain.

The drain from the safety valve must be routed outside the building, must not discharge above an entrance or window or any type of public access area, be clear of any electrical fittings and positioned so that any discharge can be seen.

4.13 Expansion Vessel

A diaphragm type expansion vessel, conforming to the current issue of BS4814 (see also BS7074 Part 1 and 2) must be connected at a point close to the inlet side of the circulating pump, see the diagrammatic layout, diagram 4.3 unless laid down differently by the manufacturer.

The expansion vessel volume depends on the total water system volume and the initial system design pressure. For any system an accurate calculation of vessel size is given in the current issue of BS5449 and BS7074 Part 1.

Example: For an initial design pressure of 0.7 bar, the minimum total vessel volume required is 0.063 x Total System Volume.

NOTE: A higher initial design pressure requires a larger volume expansion vessel.

Guidance on vessel sizing is also given in the current issue of BS5449 and BS7074 Part 1, for IE refer to the current edition of I.S.813 “Domestic Gas Installations”.

The charge pressure must not be less than the static head of the system, that is, the height of the highest point of the system above the expansion vessel.

4.14 Pressure Gauge

A pressure gauge with a set pointer and covering at least 0 to 4 bar (0 to 60 lb/in2) shall be fitted permanently to the system in a position where it can be seen when filling the system.

4.15 Domestic Hot Water Cylinder

SINGLE FEED INDIRECT CYLINDERS ARE NOT SUITABLE

The domestic hot water cylinder must be of the double feed fully indirect coil type. It must be suitable for working at a gauge pressure of 0.35 bar above the safety valve setting.

4.16 Water Makeup

Provision should be made for replacing water loss from the system using a make up bottle mounted in a position higher than the top point of the system, connected through a non-return valve to the return side of either the heating circuit or the hot water cylinder.

Alternatively, provision for make up can be made using a filling loop.

4.17 Filling a Sealed Water System

Provision for filling the system at low level must be made, see diagram 4.4. There must be no permanent connection to the mains water supply, even through a non-return valve.

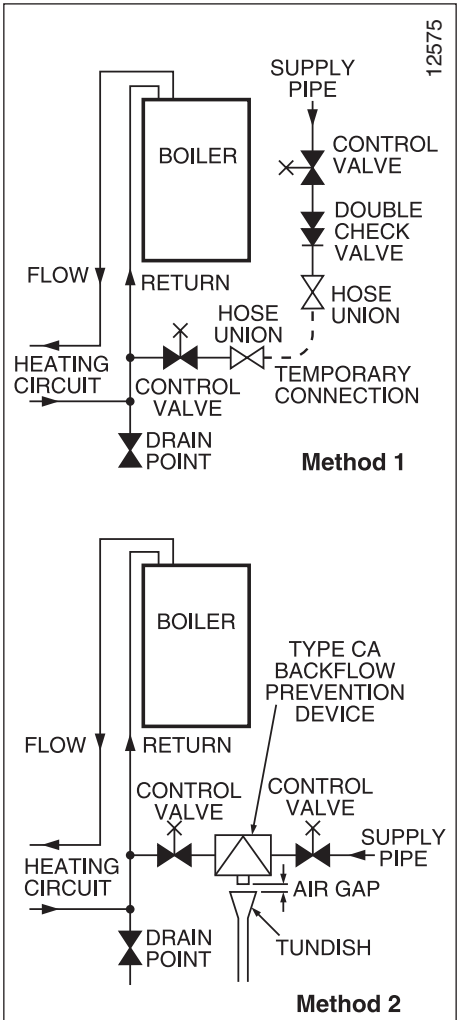

Diagram 4.4

5 INSTALLATION PREPARATION

5.1 Appliance Pack

IMPORTANT: With regards to the Health and Safety Manual Handling requirements, two persons shall be required to lift the appliance, refer to manual handling on page 5.

NOTE: The fittings pack is located in the base polystyrene packing under the boiler base.

Remove the polystyrene end packing pieces then carefully lay the boiler on its back, remove the two front casing panel securing screws and lift off the panel from two retaining lugs, see diagram 5.1.

Remove the transit packaging behind the front panel and discard.

Carefully place front panel and screws to one side.

5.2 Wall Template

Remove the wall template from the documentation pack and place in the desired position on a flat wall, giving due consideration to boiler clearances, see Section 2.2, and the flue you are fitting.

5.3 Flue Hole Cutting

The **standard horizontal flues** are designed with an internal fall of 35mm/metre towards the boiler for disposal of condensate. If the standard flue length alone is being used then the flue hole of diameter 105mm can be cut in the position marked on the wall template.

For **standard side flues** the horizontal flue centre line on the wall template should be extended to the side wall, and the vertical centre of the flue hole marked at 176mm from the back wall.

For installations with external access, a 105mm diameter core drill can be used.

For installations with internal access only a 125mm diameter core drill should be used.

When using extension pipes with the horizontal rear flue, a core drill size of 125mm should be used to allow the extension pieces to slope at 44mm/metre (2.5°) towards the boiler.

For **extended side flues** the flue hole centre should be determined by extending the dashed inclined line on the template to the side wall. This dashed line is drawn at 44mm/metre (2.5°) rise from the boiler. Where this line reaches the side wall, a horizontal line should be marked. The vertical centre line of the flue should then be marked at 176mm from the back wall, see diagram 5.2.

To allow for the flue passing through the wall at this angle a 125mm hole should be drilled irrespective of internal or external installation.

If necessary remove the wall template whilst drilling the flue hole.

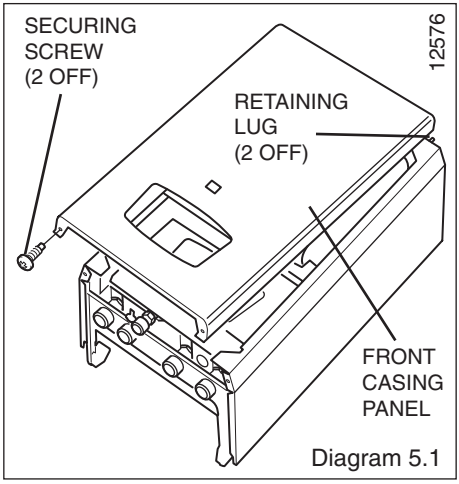

Diagram 5.1

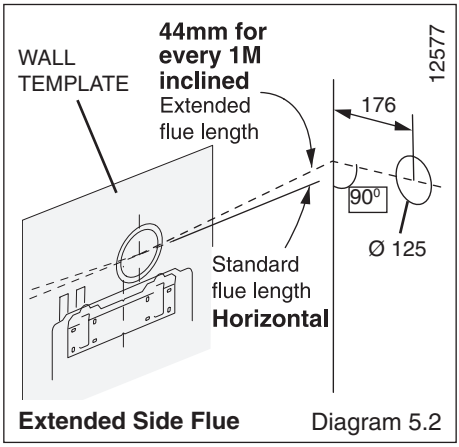

Extended Side Flue Diagram 5.2

BOILER FIXING

6.1 Hanging Bracket Fixing

If previously removed, reposition the wall template over the flue hole and mark the position of the fixing holes for the hanging bracket, see diagram 6.1.

Mark and drill the fixing holes and secure the hanging bracket, which is supplied in the polystyrene pack.

NOTE: Due to the varied site conditions we do not supply fixings and advise that the installer should supply those which are suitable.

6.2 Boiler Fixing

IMPORTANT: With regards to the Manual Handling Operations, 1992 Regulations, the following lift operation exceeds the recommended weight for a one man lift, refer to Manual Handling section on page 6.

Lifting the boiler into position, lean the top of the boiler slightly to the wall and position just above the hanging bracket. Lower the boiler slowly and engage onto the hanging bracket.

Make good the final connections.

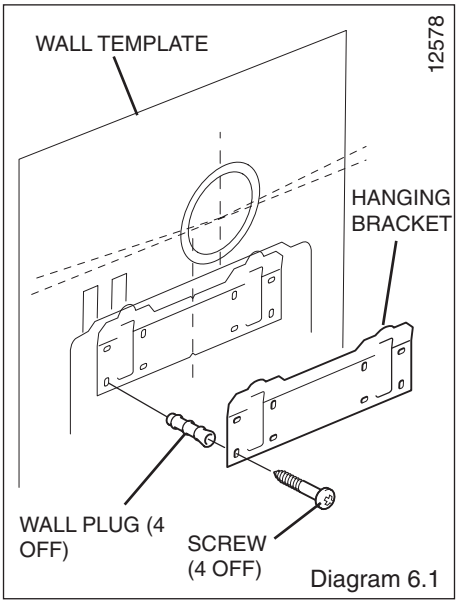

Diagram 6.1

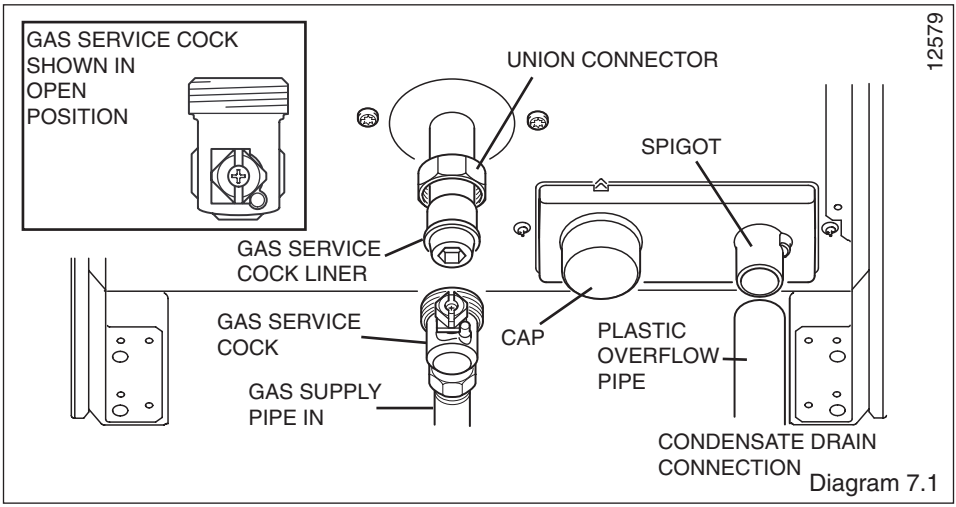

Diagram 7.1

GAS, WATER AND CONDENSATE CONNECTIONS

7.1 Gas Connection

Before connection check the supply of local gas.

The gas supply can be connected from below, see diagram 7.1. or through the wall at the rear of the boiler.

Refer also to section 1.2 and 1.3.

The whole of the gas installation, including the meter, should be inspected, tested for soundness and purged in accordance with the current issue of BS6891 and in IE the current edition of I.S.813 “Domestic Gas Installations”.

7.2 Water Connections

Provision is made for the water connections to be made from above the boiler, see diagram 7.2. The position is shown on the wall template.

Flush out the domestic hot water and the heating systems before connecting to the boiler.

7.3 Condensate Drain Connection

The condensate drain connection is at the rear of the boiler, see diagram 7.1. Using 21.5mm plastic overflow pipe connected to the spigot on the condense trap (push fit). The drain pipe should have a fall of a least 2.5° away from the boiler. Condensate should, if possible be discharged into the household internal drainage system. If this is not practicable, discharge can be allowed into the external household drains or a purpose designed soak away, refer to diagram 7.3.

It is recommended that any external condensate drain pipe is insulated and also preferably of 32mm diameter, to prevent freezing in adverse weather conditions.

The condensate is discharged periodically in ‘slugs’ by siphonic action.

It is not necessary to provide air breaks or extra traps in the discharge pipe as there is already a 75mm high trap inside the boiler. Fitting an extra trap may cause the boiler siphon to work incorrectly.

Refer to BS5546 or BS6798 for advice on disposal of boiler condensate.

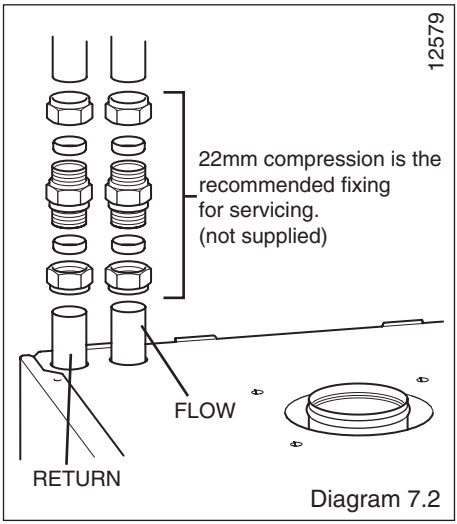
12579
22mm compression is the
recommended fixing
for servicing.
(not supplied)
FLOW
RETURN
Diagram 7.2

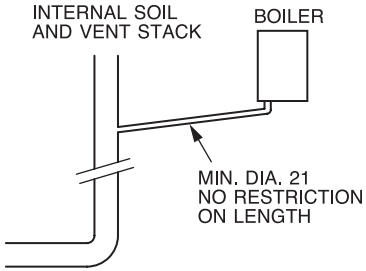

Internal Soil and Vent Pipe

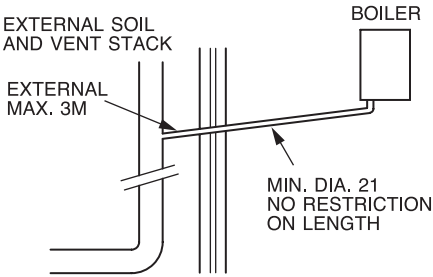

External Soil and Vent Pipe or Rainwater Pipe

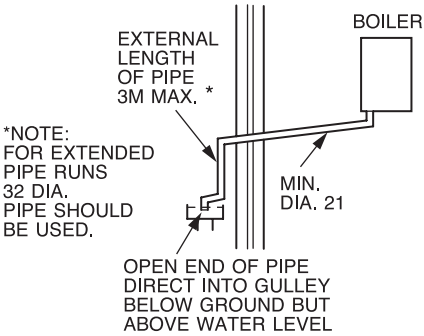

External Termination to a Gulley or Hopper

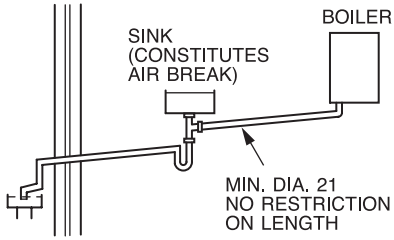

Internal Termination into Combined Sink Waste

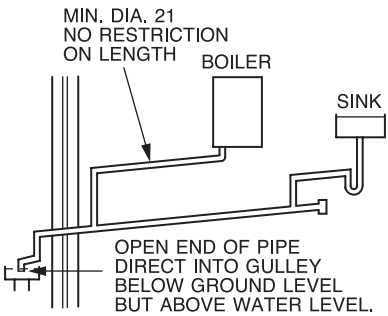

Internal Termination Downstream of Sink Waste

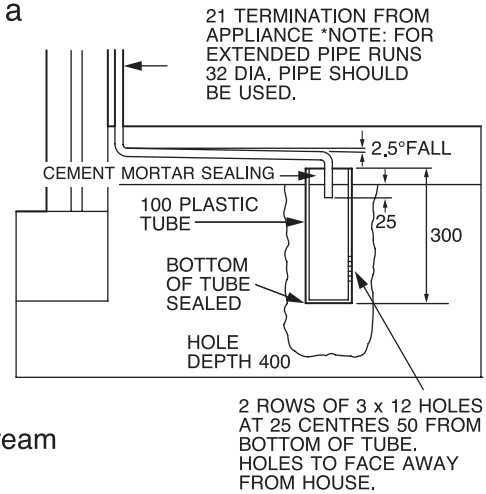

External Termination into Soakaway

NOTE: PIPEWORK SHOULD ALWAYS FALL AWAY FROM BOILER BY AT LEAST 2.5° 44mm FOR EVERY 1M.

Diagram 7.3

FLUE PREPARATION TELESCOPIC AND STANDARD

8.1 Flue Length

The components supplied in the Standard and Telescopic kit are shown in diagram 8.1.

Additional flue accessories are available to suit your site conditions, see diagram 8.2

8.2 Extension pipes

Telescopic Top Rear flue - with the flue elbow temporarily fitted, measure the distance from the outside wall to the butt joint, see diagram 8.3. If the measurement 'Y' exceeds 525mm , then the appropriate length of extension pipe is required, if the dimension is less than 320mm DO NOT cut the flue, it can project to a maximum of 600mm, if this is not desirable then a Standard flue MUST be used and cut to length.

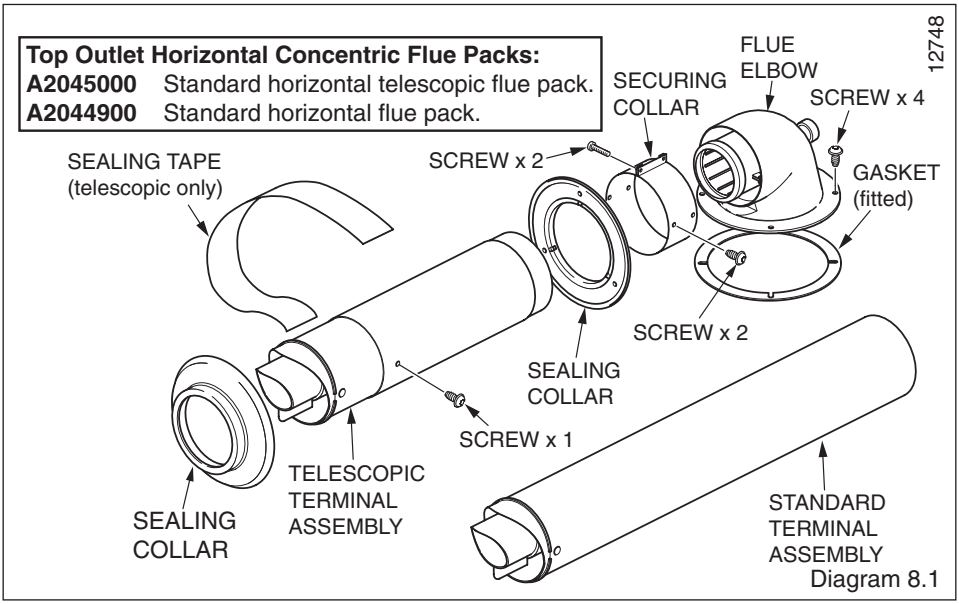

Diagram 8.1

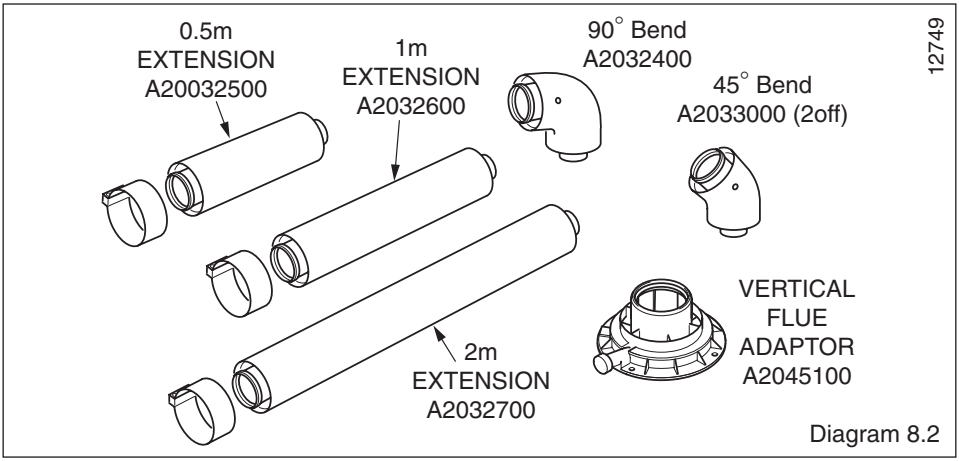

Diagram 8.2

Standard Top Rear flue - with the flue elbow temporarily fitted, measure the distance from the outside wall to the butt joint, see diagram 8.4. If the measurement 'Y' exceeds 652mm , then the appropriate length of extension pipe is required. The minimum dimension is187mm (75mm min wall thickness).

Telescopic Top Side flue - with the flue elbow temporarily fitted, measure the distance from the outside wall to the butt joint, see diagram 8.5. If the measurement 'Y' exceeds 525mm, then the appropriate length of extension pipe is required, if the dimension is less than 320mm DO NOT cut the flue, it can project to a maximum of 600mm, if this is not desirable then a Standard flue MUST be used and cut to length.

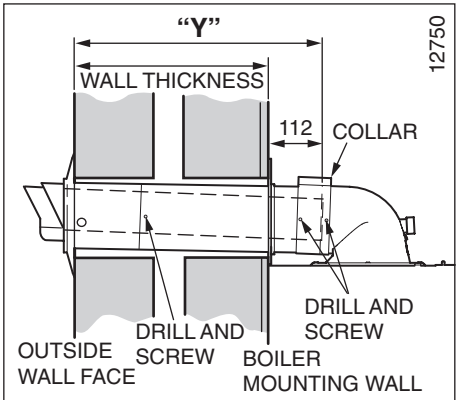

Top rear flue - telescopic Diagram 8.3

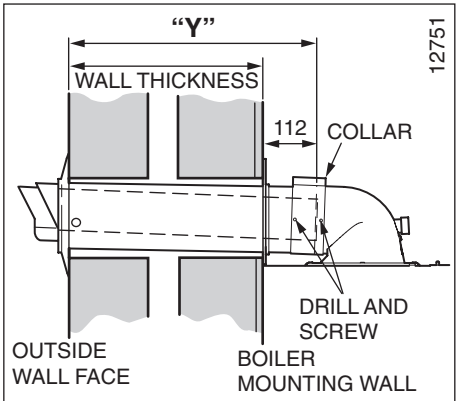

Top rear flue - standard Diagram 8.4

Standard Top Side flue - with the flue elbow temporarily fitted, measure the distance from the outside wall to the butt joint, see diagram 8.6. If the measurement 'Y' exceeds 652mm, then the appropriate length of extension pipe is required. The minimum dimension is 270(Lhd) and 167(Rhd) to suit a minimum wall thickness of 75mm.

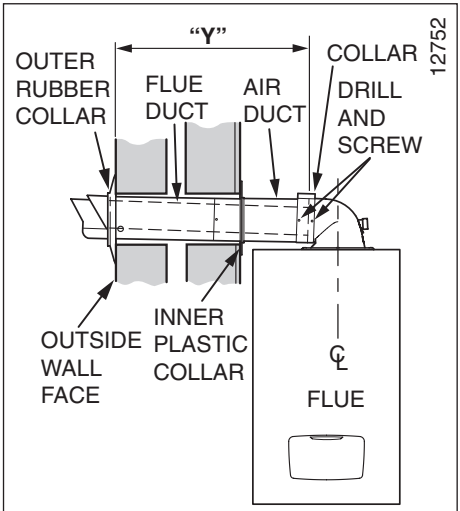

Top side flue - telescopic Diagram 8.5

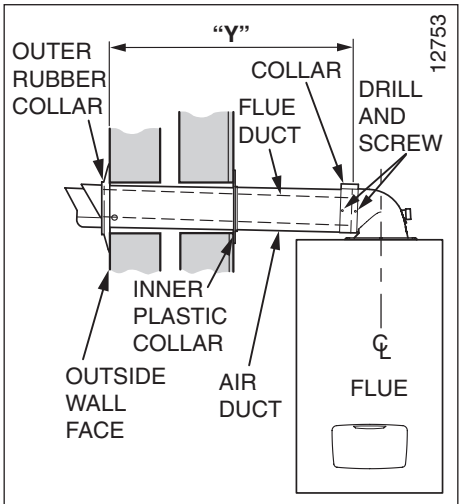

Top side flue - standard Diagram 8.6

8.2 (cont'd) Flue and Air Ducts

Telescopic:

The Telescopic Flue system MUST NOT be cut.

Adjust the flue to your required length "Y", mark the securing hole position in the air duct. Drill a 3mm diameter hole at this position, take care not to pierce the inner flue duct. Secure with screw provided and tape the joint, see diagram 8.7.

Standard:

Separate the flue duct from the terminal by twisting to release the terminal catch, then pull out of the retaining seal, refer to diagram 8.8.

The duct cutting lengths are shown in diagram 8.8.

The air duct should be cut at the opposite end to the terminal fixing.

The terminal plastic duct MUST be cut at the opposite end to the catch.

The plastic flue duct extensions MUST be cut at the opposite end to seal.

The cut ducts must be de-burred and all filings and debris removed.

Note: If you require to lubricate the seals to ease installation, please do not use a mineral oil based grease, we would recommend the use of water.

8.3 Flue Assembly

The flue assembly is a push fit design with securing collars.

Having adjusted the telescopic or cut the air and flue ducts as described in section 8.2

Assemble the flue elbow to the air duct, ensuring the correct alignment of the terminal. Fit the collar into position, mark through two of the pre drilled holes in the collar. Remove collar and drill two 3mm diameter holes in the elbow, take care not to pierce the inner flue duct.

Insert the terminal flue duct, remembering to engage the catch within the terminal, check for alignment.

Fit the rubber sealing collar behind the locating lugs on the flue terminal, see diagram 8.1.

Push the flue assembly into the wall, externally or internally, initially until the end of the assembly protrudes a short way from the inside face of the wall. This will enable the internal trim ring (if required) to be positioned and allow the flue duct to be drawn back into the flue elbow after the boiler has been mounted.

8.4 Flue Attachment To Boiler

Secure the flue elbow in position on top of the boiler with four torque headed screws supplied.

Draw the flue assembly from wall and engage the flue duct into the elbow and butt fit the air duct, then fit the collar and secure with screws provided, see diagram 8.9.

NOTE: If the air and flue ducts have been correctly cut to the instructions given in section 8.2, the rubber sealing collar should fit flush with the outside wall, check this.

Slide the internal trim ring back against the wall, securing in place with a small amount of sealant if required.

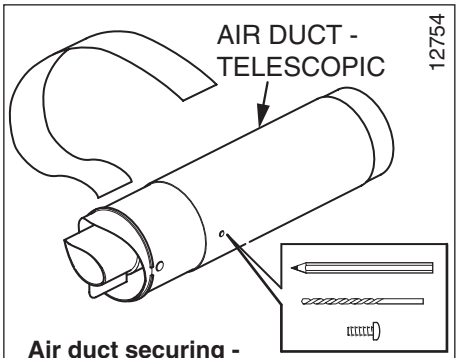

Air duct securing - telescopic Diagram 8.7

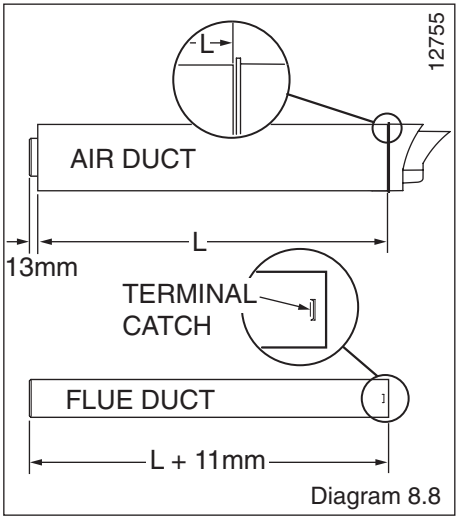

Diagram 8.8

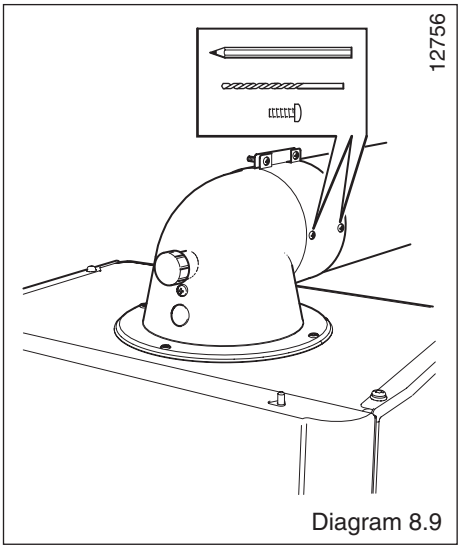

Diagram 8.9

ELECTRICAL CONNECTIONS

WARNING: This boiler must be earthed.

This appliance must be wired in accordance with these instructions. Any fault arising from incorrect wiring cannot be put right under the terms of the Saunier Duval guarantee.

All system components must be of an approved type.

Electrical components have been tested to meet the equivalent requirements of the BEAB.

Connection of the whole electrical system and any heating system controls to the electrical supply must be through a common isolator.

Isolation should preferably be by a double pole switched fused spur box having a minimum contact separation of 3mm on each pole. The fused spur box should be readily accessible and preferably adjacent to the boiler. It should be identified as to its use.

A fused three pin plug and shuttered socket outlet may be used instead of a fused spur box provided that:

a) They are not used in a room containing a fixed bath or shower.

b) Both the plug and socket comply with the current issue of BS1363.

The mains electrical supply must be maintained at all times in order to provide domestic hot water.

Do not interrupt the mains supply with a time switch or programmer.

9.1 External controls (Mains Voltage)

Important: If a replacement supply cable is required it must be purchased. Part No. S1008600.

Ensure that a separate external controls cable and pump supply cable are fed to the boiler.

Refer to wiring diagram in section 12.

All HE boilers are fitted with a connection box located at the base of the boiler into which all connections are made.

To gain access to the connection box remove the two retaining screws indicated in Diagram 9.1 and carefully lower and pull forward the box to reveal the terminal strip inside.

Remove the test cable from the terminal strip and discard.

Connect both the mains supply and switched live from the external controls (room thermostat and, if applicable, frost thermostat) into the marked terminals as shown in diagrams 9.2 and 9.3.

If a room thermostat is not fitted, then the connecting link must be fitted between terminals 1 and 2, see diagram 12.2.

Connect the pump supply into the marked pump terminals as shown in diagram 9.2.

Observe all terminal markings and colour codes as shown in diagram 12.2.

NOTE: The boiler incorporates a pump overrun thermostat. Only feed the pump from the marked terminals in the connection box on the boiler, not from a separate supply.

Ensure that all flexible cords are routed through the strain relief cable glands on the inlet of the connection box.

Refit the connection box to the underside of the boiler using the two retaining screws.

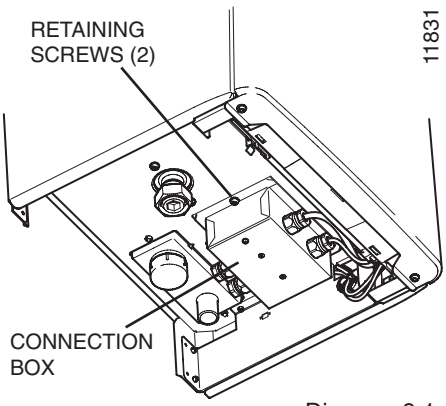

Diagram 9.1

9.2 Electrical connections - testing

Carry out preliminary electrical system checks as below:

1. Test insulation resistance to earth of mains cable.

2. Test the earth continuity and short circuit of cables.

3. Test the polarity of the mains.

9.3 Pump Connection

Ensure that a separate pump supply cable is fed to the boiler, see diagram 9.2.

Remove connection box, see diagram 9.1.

Route the pump supply cable through the strain relief cable gland, connect to the connection box as shown in diagram 9.2. Refer to diagram 12.2 for wiring colour code.

Refit the connection box to the underside of the boiler using the two retaining screws.

CABLE CONNECTIONS	
TERMINAL	MAINS INLET CONNECTIONS
1	MAINS (L) 230V ~ 6A RATED CABLE (0.75mm^2)
2	SWITCHED LIVE (L) 230V ~
3	FROST STAT (L) 230V ~
4	MAINS NEUTRAL (N) 230V ~ 6A RATED CABLE (0.75mm^2)
5	MAINS EARTH (GND 0V) 6A RATED CABLE (0.75mm^2)
6	PUMP EARTH (GND 0V) 3A RATED (0.75mm^2)
7	PUMP NEUTRAL (N) 230V ~ 3A RATED (0.75mm^2)
8	PUMP LIVE (L) 230V ~ 3A RATED (0.75mm^2)

12588

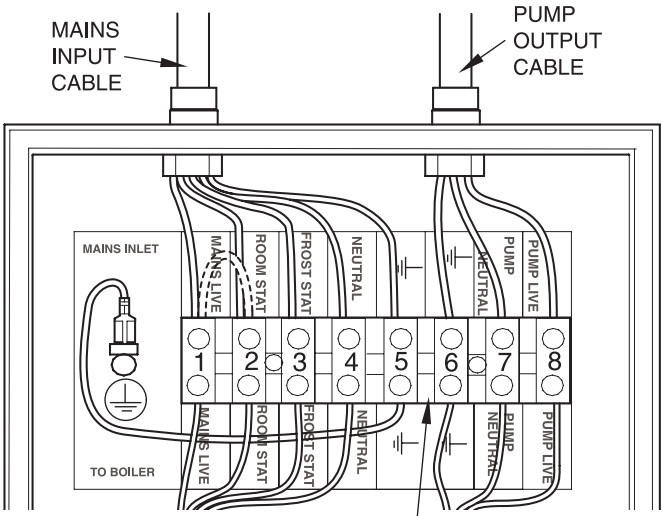

If there are no external controls to connections 2 or 3 then a "link" between connections 1 and 2 must be fitted, this will make the boiler run continuously.

TERMINAL CONNECTIONS 1 TO 8. REFER TO TABLE

Diagram 9.2

Installation and servicing instructions strictly reserved for qualified gas installers

Saunier Duval

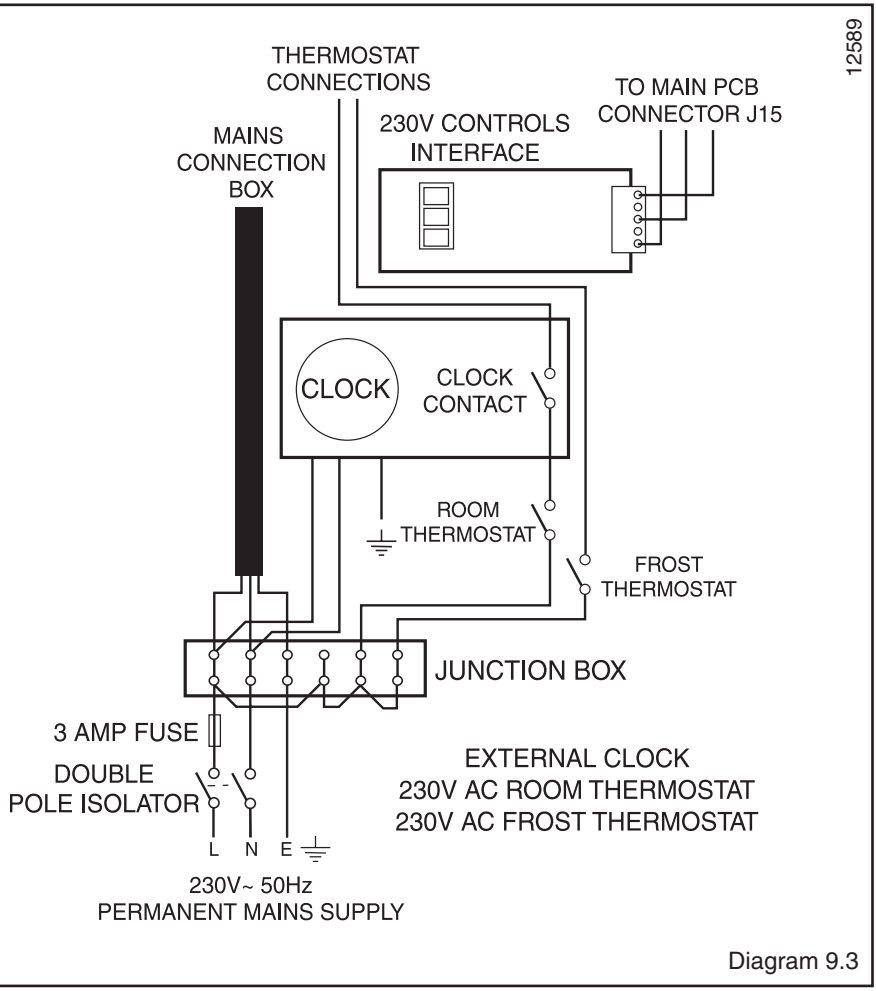
12589
THERMOSTAT CONNECTIONS
TO MAIN PCB CONNECTOR J15
230V CONTROLS INTERFACE
MAINS CONNECTION BOX
CLOCK
CLOCK CONTACT
ROOM THERMOSTAT
FROST THERMOSTAT
JUNCTION BOX
3 AMP FUSE
DOUBLE POLE ISOLATOR
EXTERNAL CLOCK
230V AC ROOM THERMOSTAT
230V AC FROST THERMOSTAT
L N E
230V~ 50Hz
PERMANENT MAINS SUPPLY

Diagram 9.3

LPG CONVERSION - 30 HE only

NOTE: Steps 10.1 to 10.3 will need to be completed before the appliance can be converted.

The 30 HE can be converted to run on LPG-Propane (G31).

This conversion should only be carried out by a **competent person.**

During the conversion to Propane use of a suitable flue gas analyser is necessary.

As an option a chargeable boiler only commissioning service can be provided by Saunier Duval Service by calling telephone No. 01773 525914.

Tools required to make the conversion are a 2mm Allen key and an electricians screwdriver.

Ensure that the appliance supply pressure = 37mbar.

NOTE: Remove the inner casing panel, see diagram 10.1.

(1) To access the gas valve. If necessary remove chassis front for extra access. See diagram 11.3

(2) Refer to diagram 10.3 and turn the gas valve throttle fully clockwise.

(3) Turn the throttle back anti-clockwise by 5 1/2 turns.

(4) Ensure that the gas analyser is set to the correct fuel setting - Propane.

(5) Attach combustion analyser to the combustion test point. See diagram 11.6.

(6) Unclip the controls fascia to reveal the service potentiometer on the rear of the user interface. See diagram 11.7.

(7) Turn on the mains electrical supply and turn on the gas service cock. Switch the boiler on.

(8) Ensure external controls are calling for heat. The boiler should fire automatically.

(9) Using an electrical screwdriver, rotate the service potentiometer to the mid point or 3 o'clock position. See diagram 11.7. The fan speed should now reduce to minimum and '12' should be shown flashing on the digital display. Check the CO_2 value. If necessary refer to diagram 10.3 and using a 2mm allen key carefully adjust the offset screw until a CO_2 reading of 10.5% ± 0.2% is achieved. Turning the offset screw clockwise increases the CO_2 reading.

(10) After setting combustion, rotate the service potentiometer fully anti-clockwise so that the display indicates the water temperature. Check that the CO_2 combustion remains between 9.8% and 10.8% CO_2. If it does not, carefully adjust the gas valve throttle (see diagram 10.3) until this is achieved.

(11) Remove analyser probe from the test point and replace the cap. Refit the control panel.

(12) Fit the LPG conversion label supplied in the documentation pack to the inner front panel alongside the data label. Refit the inner door and outer door.

10.1 Preliminaries - All Systems

Remove inner casing panel, see diagram 10.1.

A **competent person** in accordance with the current issue of BS6798 should carry out commissioning.

Make sure that the system has been thoroughly flushed out with cold water.

Refill the system with water, making sure that all the air is properly vented from the system and pump, diagram 10.2 shows vent point.

Before operating the boiler check that all external controls are calling for heat.

10.2 Sealed Systems

Fill the system until the pressure gauge registers the recommended pressure. Clear any air locks and check for leaks.

10.3 Preparation for Lighting

Isolate the boiler from the mains electrical supply.

Test for gas soundness and purge air from the gas supply. Turn on the gas service cock, slot in line with the length of the valve, see diagram 7.1.

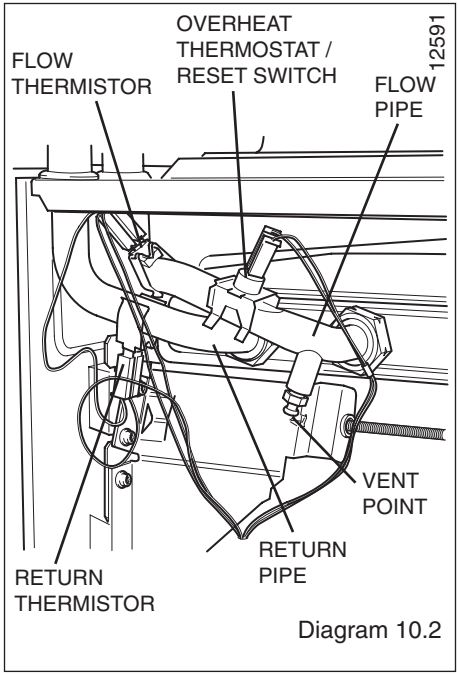

Diagram 10.2

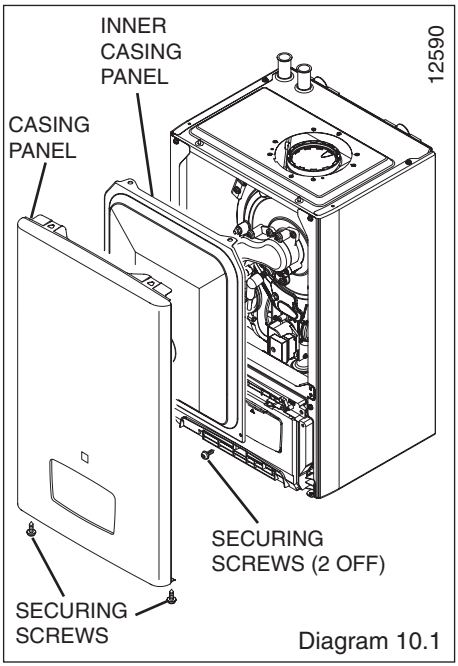

Diagram 10.1

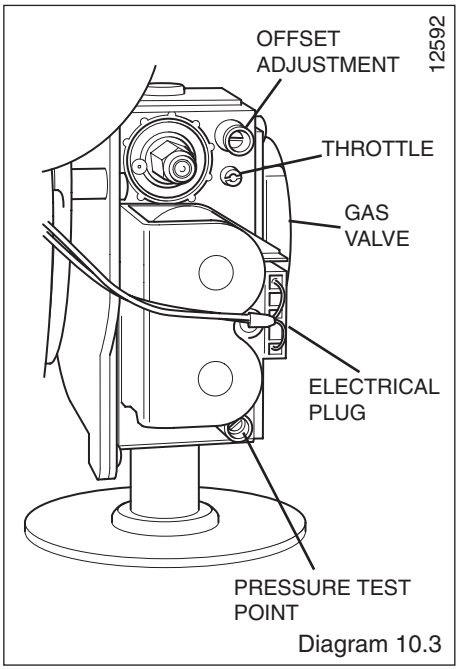

Diagram 10.3

10.4 Initial Lighting

The lighting procedure of the boiler is fully automated.

Check that all external controls are calling for heat. If an integral programmer is fitted check that it is correctly programmed and if necessary overridden to call for heat.

Ensure that the water temperature control knob is turned OFF (☀).

Turn on the mains electrical supply and the mains reset switch to (I) on the controls fascia.

Turn the water temperature control knob to (❄) **MINIMUM.**

The fan should start and after a few seconds the ignition will commence

If the burner fails to light the fan will stop. Initially this may be due to air in the gas supply line. The boiler will automatically have three attempts at ignition.

If necessary turn the mains reset switch to the off position (O), then back to the on position (I) and the boiler will restart.

After the boiler has lit, allow to warm at **MINIMUM** temperature setting to purge any air from the system.

NOTE: If the appliance is operated above **MINIMUM** on initial lighting, there is a possibility that the overheat stat will trip, this is due to air in the system having not been purged. See diagram 10.2 for overheat thermostat/reset switch.

Once the system has been purged of air turn the central heating knob to the desired temperature.

The appliance will then continue to fire until the user controls are satisfied.

NOTE: After first power up the firing sequence for central heating changes. After one minute stabilisation time the boiler will ramp slowly to full rate rather than going immediately to full rate. This is an adaptive feature to cope with small system requirements.

10.5 Testing - Gas (Natural Gas only)

	Case Off	Case On
Burner CO2 (G20)	9.1+0.2-0.5	9.3+0.3-0.5
Burner CO2 Propane (G31)	10.5+0.3-0.7	10.7+0.3-0.7

Should any doubt exist about the gas rate, check it using the gas meter test dial and stop watch at least 10 minutes after the burner has lit, making sure that all other gas burning appliances and pilot lights are off.

The approximate gas rates:
18 HE : 2.0m3/h (70.6ft3/h)
30 HE : 3.02m3/h (107ft3/h)

The gas valve is factory set for natural gas (G20) and should need no adjustment. (LPG (G31) should be adjusted as described on page 30, (LPG CONVERSION). It should be checked that the supply pressure is 20mb when the boiler is firing at full rate. This can be achieved by checking the inlet pressure at the pressure test point on the gas valve shown in diagram 10.3.

Disconnect pressure gauge.

NOTE: that the burner pressure cannot be measured at the gas valve as it is altered by the suction of the fan and modulated according to demand.

Replace inner casing panel and casing panel, see diagram 10.1.

10.6 Testing - Heating System

Check that all remote controls are calling for heat. The boiler will fire automatically. Fully open all radiator valves, flow control valve 'A' and bypass valve 'B' if fitted, see diagram 4.3.

Balance the radiators as required and if fitted adjust valve 'A' to give the required system differential. Turn off all radiators that can be shut off by the user and check to see if less than the maximum differential allowed of 20°C can be achieved across flow and return.

Allow the system to reach maximum temperature then switch off the boiler by isolating from the electrical supply.

Drain the entire system rapidly whilst hot, using the drain tap at the lowest part of the system. Fill and vent the system as described previously in section 10.2

Lock or remove the handles from controls valve 'A' and bypass valve 'B' to prevent unauthorised adjustment.

10.11 Completion

Adjust the boiler temperature control and any system controls to their required settings.
For IE, it is necessary to complete a "Declaration of Conformity" to indicate compliance to I.S.813. An example of this is given in the current edition of I.S.813.

Testing Flue Gases: If any doubt exists that the flue products are not exhausting correctly, investigate by use of a gas analyser (FGA).

COMMISSIONING - INSTRUCTIONS TO THE USER

10.7 User Controls and Options

The mains reset switch is used to restart the boiler after a fault condition has occurred, i.e. ignition failure.

The water temperature control knob allows the user to set the desired temperature.

Temperature Display

The digtal display normally shows the operating temperature of the unit.

10.8 Pump Exercise Program

After a power cut or every 24 hour in frost setting/ summer mode the pump will run for one minute to prevent it from sticking. This will also occur during normal operating if there is no demand for more than 24 hours

10.9 Frost Protection

The boiler has a built in frost protection programme as long as the electricity and gas are left switched on.

This device operates the burner and system pump when the temperature inside the boiler falls to 3°C.

When the temperature inside the appliance reaches 10°C the burner will shut down and after a short period the pump will stop.

This device primarily protects the boiler. Any other exposed areas of the system should be protected by a separate frost thermostat.

10.10 Instruct the User

Instruct and demonstrate the lighting procedure and advise the user on the safe and efficient operation of the boiler.

Instruct on and demonstrate the operation of any heating system controls.

Advise the user on the use and maintenance of any scale reducer and pass on any relevant instructional documents.

Advise that to ensure the continued efficient and safe operation of the boiler it is recommended that it is checked and serviced at regular intervals. The frequency of servicing will depend upon the installation conditions and usage, but in general, once a year should be enough.

Draw attention, if applicable, to the current issue of the Gas Safety (Installation and Use) Regulations, Section 35, which imposes a duty of care on all persons who let out any property containing a gas appliance.

The user shall not interfere with or adjust sealed components.

It is the Law that any servicing is carried out by a **competent person**.

Advise the user that, like all condensing boilers this appliance will produce a plume of condensation from the flue terminal in cool weather. This is due to the high efficiency and hence low flue gas temperature of the boiler.

Advise the user of the precautions necessary to prevent damage to the system, boiler and the building, in the event of the heating system being out of use during frost or freezing conditions.

Advise the user that the permanent mains electrical supply SHOULD NOT be switched off, as the built in frost protection and pump saver program would not be operable.

Reminder, leave these instructions with the user.

SERVICING

IMPORTANT NOTES:

To ensure the continued efficient and safe operation of the boiler it is recommended that it is checked and serviced at regular intervals. The frequency of servicing will depend upon the particular installation and usage, but in general once a year should be enough.

It is the Law that any servicing is carried out by a **competent person.**

When replacing a part on this appliance, use only spare parts that you can be assured conform to the safety and performance specification that we require. Do not use reconditioned or copy parts that have not been clearly authorised by Saunier Duval.

11.1 General

Measurement of the products of combustion can be achieved by connection of a probe to the combustion analyser test point on the flue elbow, see diagram 11.6. Refer to section 11.6 and table 2 in section 1.

IMPORTANT NOTE: Products of combustion will be discharged when the cap is removed. It is important to replace the cap immediately.

Before commencing with a service or replacement of parts the boiler should be isolated from the electrical supply and the gas supply should be turned off at the gas service cock, see diagram 11.2.

For access inside the appliance a Torx T20 drive is required or alternatively a flat blade screwdriver can be used.

All routine servicing requirements can be achieved by the removal of the front panel, inner panel and chassis front only. Remove the two screws on the underside of the front panel and lift off. Undo the two screws on the front of inner panel and lift off, see diagram 10.1. To remove chassis front, refer to diagram 11.3.

Unless stated otherwise any part removed during servicing should be replaced in the reverse order to removal.

Servicing should always include the removal of any debris from the condensate pipe and siphon.

After completing any servicing of gas carrying components, ALWAYS test for gas soundness and carry out a functional test of the controls.

Testing Flue Gases: If any doubt exists that the flue products are not exhausting correctly, investigate by use of a gas analyser (FGA).

11.2 Spark Electrode

Disconnect the ignition lead and earth lead from the igniter unit and remove the two securing screws at the spark electrode. Withdraw the spark electrode carefully from the combustion chamber, see diagram 11.1.

Inspect the tips for damage.

Clean away any debris and check the spark gap is 3.5mm to 4.5mm.

Check the electrode gasket for signs of damage and replace if necessary.

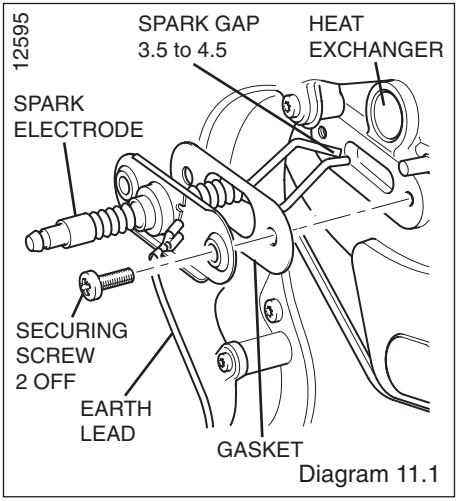

Diagram 11.1

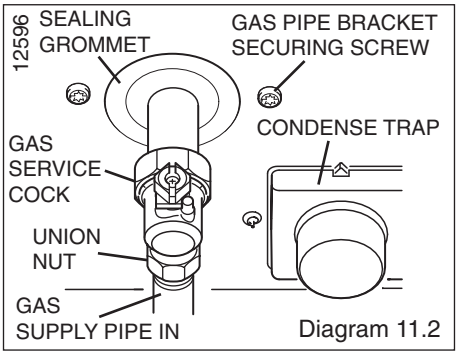

Diagram 11.2

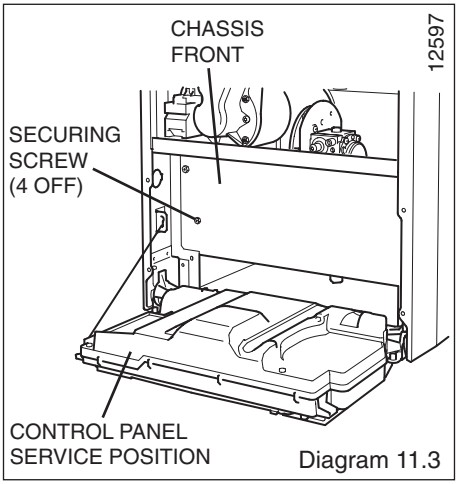

Diagram 11.3

11.3 Burner

Refer to diagrams, 11.2,11.3,11.4 and 11.5.

Isolate the gas supply at the gas service cock.

Disconnect the gas supply at the gas service cock.

NOTE: DO NOT DISCONNECT AT THE GAS VALVE.

Remove the two gas pipe bracket securing screws from underside of inner case, see diagram 11.2.

Drop down the control panel into the service position.

Remove the four screws from the chassis front, see diagram 11.3.

Remove the chassis front by pulling it out at the top from its retaining slots.

NOTE: When replacing chassis front panel ensure the bottom fits behind lip.

Disconnect the gas valve plug at the gas valve, see diagram 11.4.

Disconnect the electrical leads from the fan.

Remove the five combustion chamber front securing nuts, see diagram 11.5.

Gently remove the fan, gas valve and burner assembly from the combustion chamber complete with the gas pipe bracket and seal.

Clean the burner with a soft brush taking great care not to damage the front insulation. **DO NOT** use wire or sharp instruments to clean the holes of the burner.

Inspect the burner for any signs of damage.

Removal of the burner is not necessary during a normal service.

NOTE: IF THE BURNER HAS TO BE REMOVED IT WILL REQUIRE A NEW GASKET WHEN REFITTED.

When replacing the assembly ensure the sealing grommet is correctly fitted.

11.4. Combustion Chamber and Heat Exchanger.

Refer to diagram 13.3.

Remove loose debris from combustion chamber using a soft brush and vacuum cleaner. Carefully flush by spraying water any remaining debris through the condensate trap (Ensure the water is kept away from electrical components).

11.5 Condensate Drain

The condense drain does not normally need removing during servicing.

To flush the condense drain carefully pour water into the heat exchanger and check that water flows freely to drain.

If the condense drain is blocked refer to section 13.16 for removal.

11.6 Combustion Check

Once the appliance has been reassembled (apart from the front and inner casing panels) connect a CO2 combustion analyser to the test point on the flue elbow or vertical flue adapter, see diagram 11.6.

Turn on the gas service cock, see diagram 11.2.

With the power off and the appliance cold, unclip the controls fascia and hinge it down to reveal the potentiometers on the rear of the User interface, see diagram 11.7. Take care not to allow the fascia to drop down and damage the wiring.

Turn on the electrical supply.

Ensure external controls are calling for heat. The boiler should fire automatically. Allow the boiler to fire for a minimum of 60 seconds and then, using an electrical screwdriver, rotate the 'service' potentiometer fully clockwise, see diagram 11.7.

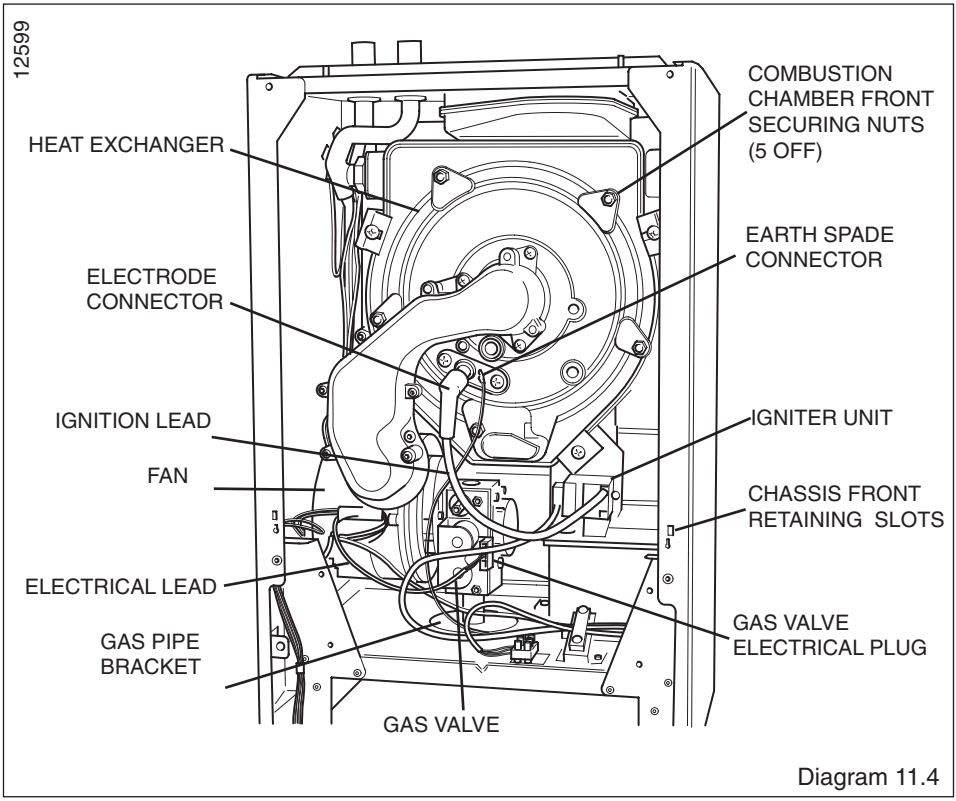

Diagram 11.4

This will allow the digital display to indicate the 'flashing' fan speed on the appliance fascia.

In the fully clockwise position the display should be indicating the maximum fan speed of the appliance, 41±1 for 18 HE and 57±1 for 30 HE). Check the CO2 value, corresponds to the value in table 4.

NOTE: With the inner casing panel fitted the combustion readings will increase slightly.
If adjustment proves necessary then proceed as follows.

NOTE: For adjustment of appliances on LPG refer to LPG conversion on page 30.

Any adjustment to the gas valve should only be carried out by a **competent person.**

Refer to diagram 10.3.

Adjust the maximum rate CO2 with the throttle to the value stated in table 4. (Rotate anti-clockwise to increase).

Rotate the 'service' potentiometer fully anti-clockwise. Hold it in this position for about 5 seconds before rotating the service potentiometer clockwise to the mid-point or 3 o'clock position. The fan should reduce to 1200 ±100 rpm which will flash '12' on the digital display.

Check the CO2 value which should correspond to the value in table 4.

If adjustment proves necessary then proceed as follows.

Adjustment of the CO2 at minimum rate is very coarse so carefully adjust the CO2 with the offset adjustment to the value stated in table 4, see diagram 10.3.

Rotate the 'service' potentiometer fully clockwise, see diagram 11.7, and recheck the maximum rate combustion, which should be the value stated in table 4.

After checking combustion rotate the 'service' potentiometer fully anti-clockwise so that the digital display indicates the water temperature.

Replace the cap on the sampling point and refit the control cover rear panel.

TABLE 4	
18 HE	
BURNER %CO_2 Case Off BURNER %CO_2 Case On	9.1 + 0.2 - 0.5 9.3 + 0.3 - 0.5
	MIN. MAX.
APPROXIMATE GAS RATE (after 10 mins. from cold) m^3/h ft^3/h	0.53 2.0 18.7 70.06
30 HE	
BURNER %CO_2 Case Off BURNER %CO_2 Case On	9.1 + 0.2 - 0.5 9.3 + 0.3 - 0.5
	MIN. MAX.
APPROXIMATE GAS RATE (after 10 mins. from cold) m^3/h ft^3/h	0.56 3.02 19.8 107
30 HE LPG	
BURNER %CO_2 Case Off BURNER %CO_2 Case On	10.5 + 0.3 - 0.7 10.7 + 0.3 - 0.7
	MIN. MAX.
APPROXIMATE GAS RATE (after 10 mins. from cold) m^3/h ft^3/h	0.56 3.02 19.8 107

12600

COMBUSTION CHAMBER

SECURING NUTS (5 OFF)

BURNER

FAN

GAS VALVE

GAS PIPE BRACKET AND SEAL

Diagram 11.5

12720

FLUE ELBOW

COMBUSTION ANALYSER TEST POINT

VERTICAL FLUE ADAPTER

Diagram 11.6

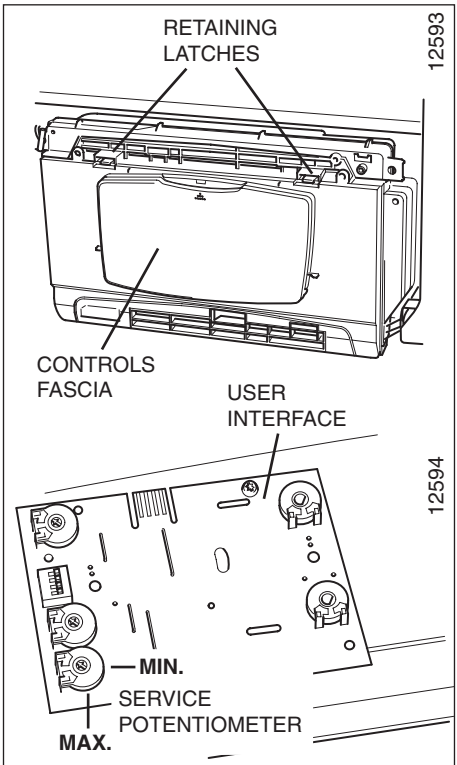

POTENTIOMETERS Diagram 11.7

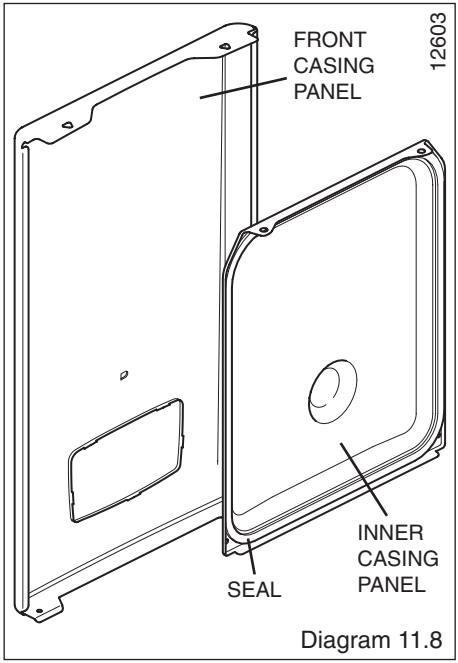

Diagram 11.8

11.7 Inner Casing Panel Seal Check.

Refer to diagram 11.8.

Check the condition of the seal, replace as required.

To replace remove the old seal, thoroughly clean the casing surfaces. Fit the new seal, it is supplied to the correct length.

FAULT FINDING

NOTE:

Before trying to operate the boiler make sure that :

• All gas supply cocks are open and that the gas supply has been purged of air.

• There is a permanent mains supply to the boiler.

• There is a heating demand from the external controls.

WARNING:

Always isolate the boiler from the electrical supply before carrying out any electrical replacement work.

Always check for gas soundness after any service work.

Electrical Testing

Should there be any doubt about the voltage supply to any of the components, it is possible to carry out a simple electrical test.

IMPORTANT: On completion of the Service/Fault Finding tasks which have required the breaking and remaking of the electrical connections the earth continuity, polarity, short circuit and resistance to earth checks must be repeated using a suitable multimeter.

To carry out the electrical test, gain access, as follows:

Hinge down the control box and remove Torx screws and unhook the rear panel, refer diagram 12.1.

Refer to the Wiring diagram 12.2 and fault finding charts diagrams 12.3 and 12.4.

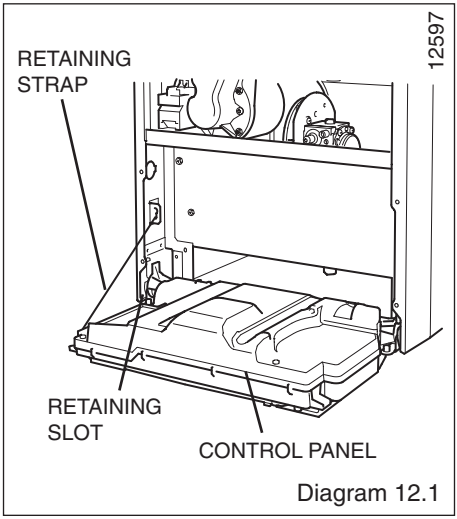

Diagram 12.1

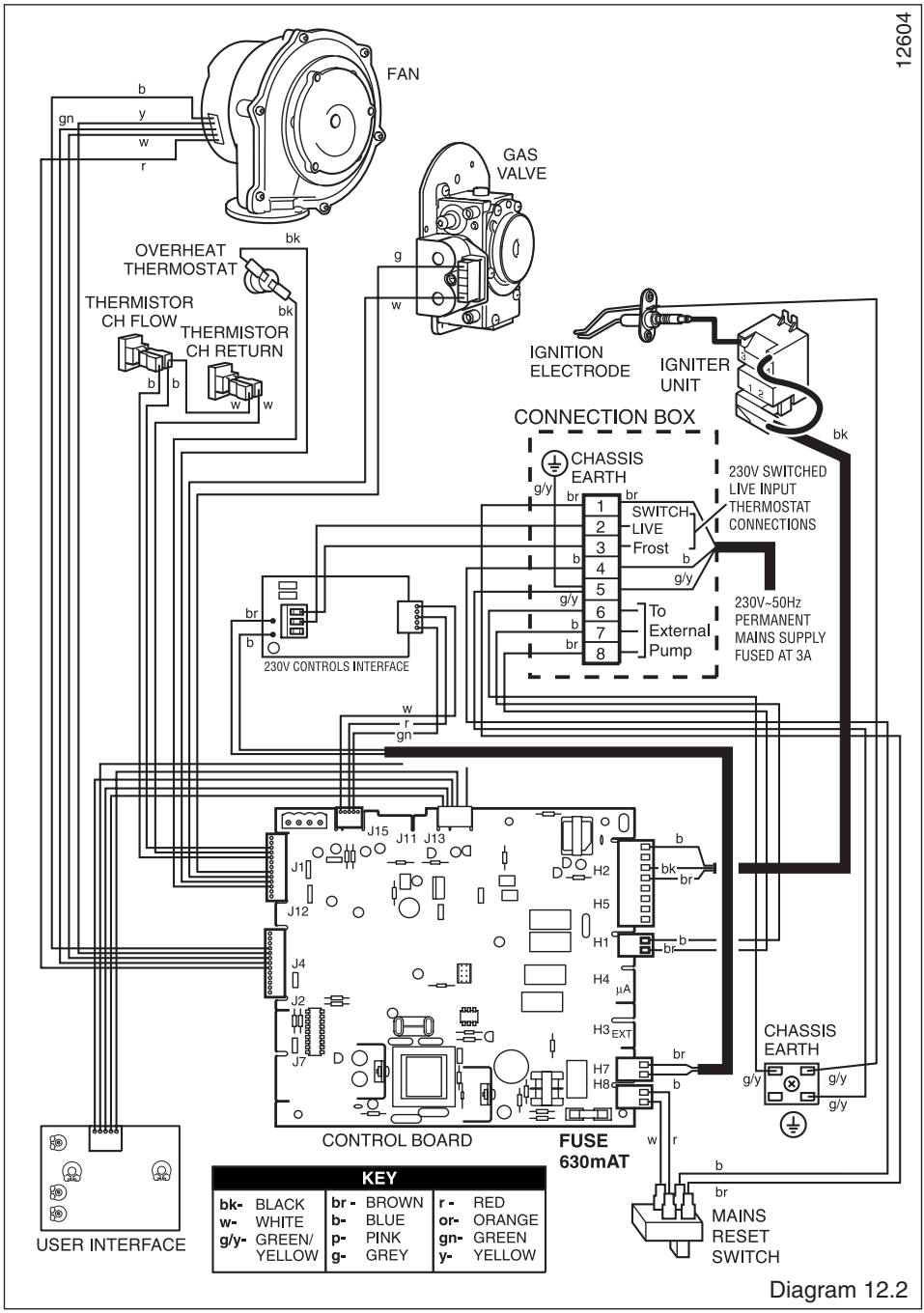
12604
FAN
GAS VALVE
OVERHEAT THERMOSTAT
THERMISTOR CH FLOW
THERMISTOR CH RETURN
IGNITION ELECTRODE
IGNITER UNIT
CONNECTION BOX
CHASSIS EARTH
230V SWITCHED LIVE INPUT THERMOSTAT CONNECTIONS
SWITCH LIVE
Frost
To External Pump
230V~50Hz PERMANENT MAINS SUPPLY FUSED AT 3A
230V CONTROLS INTERFACE
CONTROL BOARD
FUSE 630mAT
CHASSIS EARTH
MAINS RESET SWITCH
USER INTERFACE
KEY
bk- BLACK
w- WHITE
g/y- GREEN/ YELLOW
br - BROWN
b- BLUE
p- PINK
g- GREY
r - RED
or- ORANGE
gn- GREEN
y- YELLOW

Diagram 12.2

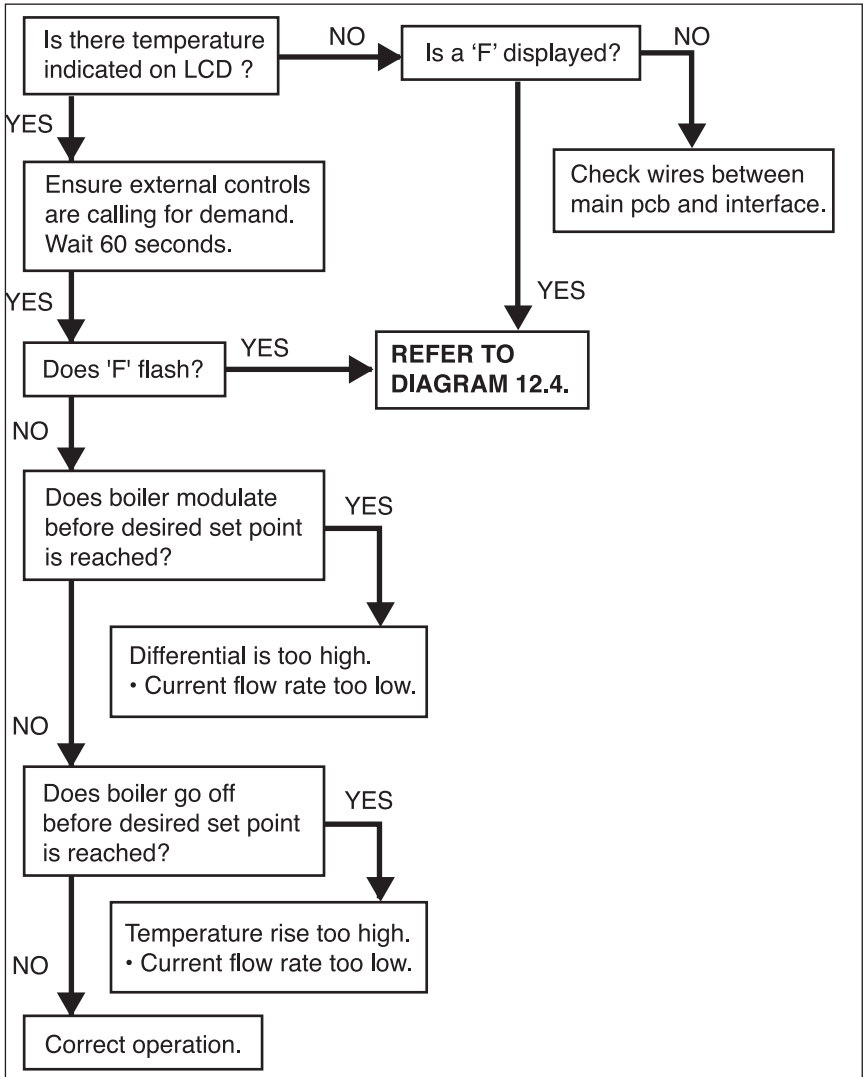

COMPONENT	
CH thermistor	10K Ω @ 25°C
Fan	24V DC across blue and red at fan.
Gas Valve	24V DC / 55 Ω

Diagram 12.3

12605

Installation and servicing instructions strictly reserved for qualified gas installers

Saunier Duval

CODE	DESCRIPTION	POSSIBLE CAUSE
F1	Ignition fault (lockout) Boiler failed to light	No gas Insufficient gas Incorrect gas valve adjustment Electrode Ignition lead defect Electronic igniter defective Check air inlet duct Check connections to igniter unit
F4	Ignition fault (lockout) Went out when lit	As **F1 possible cause**
F5	Overheat fault	Overheat stat operated Maximum temperature exceeded Check thermistor connections Air in system with thermistor at maximum setting Faulty overheat stat connection Check that pump is wired into appliance and not from programmer. This would cause no pump overrun
F6	Central heating flow thermistor fault	Thermistor cable defective/broken, thermistor faulty Check that thermistor attached correctly to pipe
F10	Central heating return thermistor fault	Thermistor cable defective/broken, thermistor faulty Check that thermistor attached correctly to pipe
F11	Main board connection fault	Check wiring between mainboard and user interface
F12	User interface connection fault	Check wiring between mainboard and user interface
F13	Main PCB connection fault	Check connections and wires
F14	Central heating flow temperature is greater than 95°C	System fault Possible pump failure Check Thermistor on flow
F16	Flame detection fault (flame presence for more than 5 seconds after burner stop)	Gas valve defective
F17	Power supply is less than 170V	Check electrical supply / polarity
F18	User interface fault	Faulty User Interface
F19	Central heating thermistor unplugged	Check Thermistor connection
F20	Software incompatibility	Incorrect user interface or Main PCB
F24	Central heating return temperature is greater than 90°C	System fault Possible pump failure Check Thermistor on return
F25	Maximum temperature rise slope	Possible pump failure Air in system
F26	Maximum delta temperature	Check Thermistor on return System - too restrictive

Diagram 12.4

REPLACEMENT PARTS

13.1 Important Notes:

When replacing a part on this appliance, use only spare parts that you can be assured conform to the safety and performance specification that we require. Do not use reconditioned or copy parts that have not been clearly authorised by Saunier Duval.

Replacement of parts must be carried out by a **competent person.**

Before replacing any parts the boiler must be isolated from the mains electric supply and the gas must be turned off at the service cock on the boiler, see diagram 11.2.

Unless stated otherwise parts are replaced in the reverse order to removal.

After replacing any parts always test for gas soundness and if necessary carry out functional test of the controls.

For replacement of parts the casing panel the inner casing panel and chassis front panel of the boiler will need to be removed, see diagrams 10.1 and 11.3 To remove undo the two screws on the underside of the front casing. Undo the two screws on the front of the inner front panel and lift off. Remove the four screws from the chassis front and remove it by pulling it out at the top from its retaining slots.

NOTE: When replacing chassis front panel ensure the bottom fits behind the lip.

The side panels can be hinged sideways to aid replacement of parts.

Undo and remove the three screws securing each side panel to the boiler, two at the front and one at the top.

13.2 Spark Electrode

For access, refer to section 13.1.

Remove the spark plug lead, earth lead and two securing screws. Withdraw the spark electrode carefully from the combustion chamber, see diagram 11.1.

13.3 Igniter Unit

For access, refer to section 13.1.

Remove ignition lead and electrical connections, see diagram 11.4.

Remove igniter unit by removing two securing screws.

13.4 Ignition Lead

For access, refer to section 13.1.

Refer to diagram 11.4.

Pull the spark plug style connector off the spark electrode and the spade connector connected to the igniter unit.

13.5 Gas Valve

For access, refer to section 13.1.

Remove the electrical plug from the gas valve, see diagram 10.3.

Refer to section 11.3 for removal of the fan, gas valve and burner assembly.

Before removing the gas valve note its position on the fan.

Remove the three securing screws, which fix the gas valve, plastic swirl plate to the venturi on the fan.

Remove the gas valve.

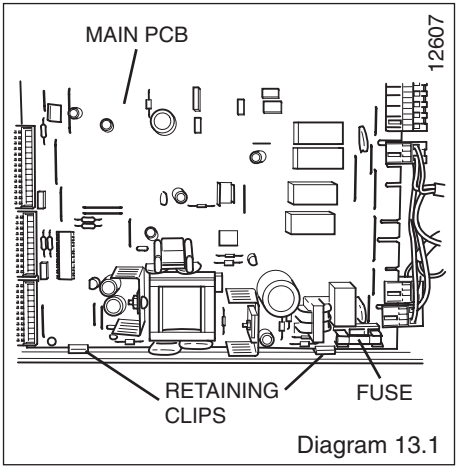

Diagram 13.1

Remove the gas supply pipe from the gas valve.

When refitting the gas valve take care as it can be fitted more than one way.

After assembly test for gas soundness and purge in accordance with the current issue of BS6891 or in IE, the current edition of I.S.813 “Domestic Gas Installations”.

13.6 Fan

For access, refer to section 13.1.

Remove electrical plug.

Refer to section 11.3 for removal of the fan, gas valve and burner assembly.

Remove the gas valve as described in the relevant parts of section 13.5.

Remove the venturi plate secured with three screws and remove the two screws securing the fan to the gas manifold, see diagram 13.2.

Check the gasket and replace if necessary.

NOTE: The 30 HE fan is secured through an extension piece with two securing screws, check and replace any seals or gaskets if necessary.

13.7 Burner

For access, refer to section 13.1.

Refer to section 11.3 for removal of the fan, gas valve and burner assembly.

Remove the four screws that secure the burner.

NOTE: THE BURNER WILL REQUIRE A NEW GASKET WHEN REFITTED.

13.8 Front Insulation

For access, refer to section 13.1.

Refer to section 11.3 for removal of the fan, gas valve and burner assembly.

Remove burner as per section 13.7.

Remove spark electrode, see section 13.2.

NOTE: THE BURNER WILL REQUIRE A NEW GASKET WHEN REFITTED.

13.9 Rear Insulation

For access, refer to section 13.1.

Refer to section 11.3 for removal of the fan, gas valve and burner assembly.

Remove securing screw and washer in the centre of the insulation and withdraw insulation, see diagram 13.3.

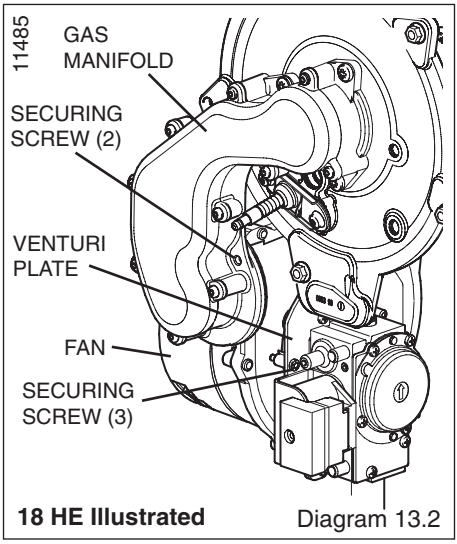

18 HE Illustrated Diagram 13.2

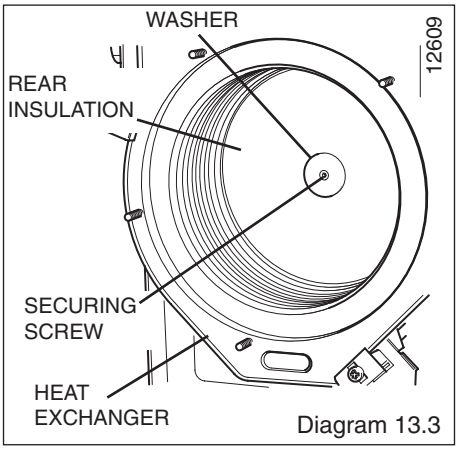

Diagram 13.3

13.10 Viewing Window

For access, refer to section 13.1.

Refer to diagram 13.4.

Remove circlip.

Remove steel washer.

Remove glass.

Remove fibre washer.

Replace in reverse order.

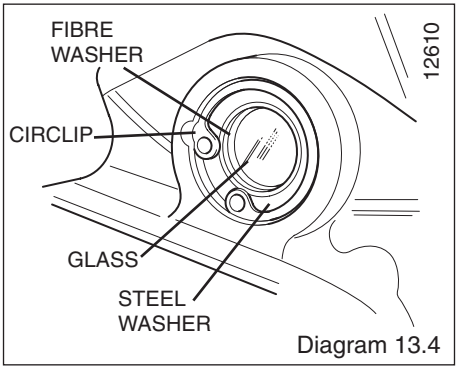

Diagram 13.4

13.11 Heat Exchanger

Refer to Manual Handling section on page 6.

For access, refer to section 13.1.

Refer to section 11.3 for removal of the fan, gas valve and burner assembly.

Drain the boiler.

Pull to remove the black condense pipe out of the bottom of the heat exchanger.

Undo the two nuts of the flow and return pipes from the heat exchanger, see diagram 13.5.

Move the pipes away from the heat exchanger.

Loosen the three heat exchanger securing screws and clamps (two at the top and one at the bottom) to remove the heat exchanger, see diagram 13.5.

CAUTION: There will be water in the heat exchanger.

Remove the condense pipe connector from bottom of heat exchanger.

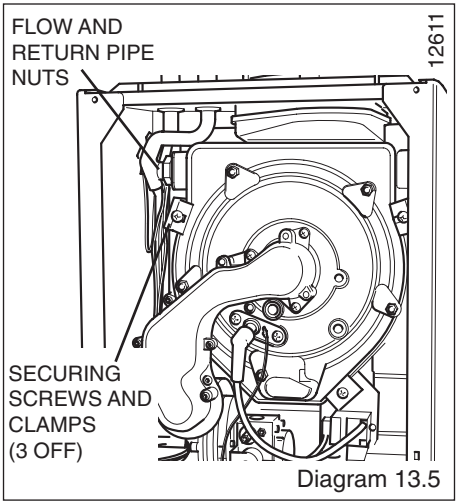

Diagram 13.5

13.12 Flue Hood

For access, refer to section 13.1.

Remove heat exchanger as per section 13.11.

Remove the two securing screws and pull the flue hood down and away from the flue hood bracket and flue elbow, see diagram 13.6.

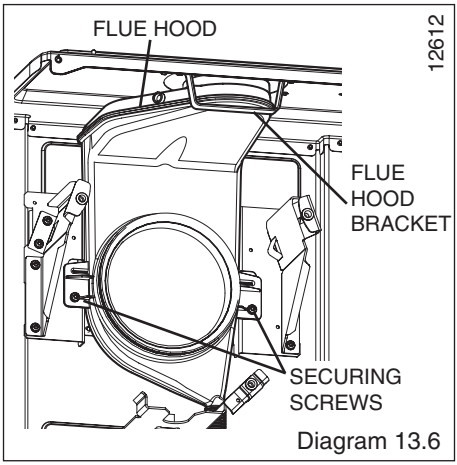

Diagram 13.6

13.13 Heating Flow Thermistor

For access, refer to section 13.1.

Refer to diagram 13.7.

Remove the electrical connections from the thermistor.

Remove the retaining clip from the flow pipe.

Remove the thermistor from the retaining clip.

NOTE: that the polarity of the wiring to thermistors is unimportant.

13.14 Heating Return Thermistor

For access, refer to section 13.1.

Refer to diagram 13.7.

Remove the electrical connections from the thermistor.

Remove the retaining clip from the flow pipe.

Remove the thermistor from the retaining clip.

NOTE: that the polarity of the wiring to thermistor is unimportant.

13.15 Overheat Thermostat

For access, refer to section 13.1.

Refer to diagram 13.7.

Remove the electrical connections from the overheat thermostat.

Remove the retaining clip from the flow pipe.

Remove the overheat stat from the retaining clip.

NOTE: When fitting new thermostat, please ensure that it is located correctly onto the flat area of the pipe and the retaining clip is secure.

13.16 Condensate Drain

Refer to diagram 13.8.

Remove black flexible tubes from siphon adapter.

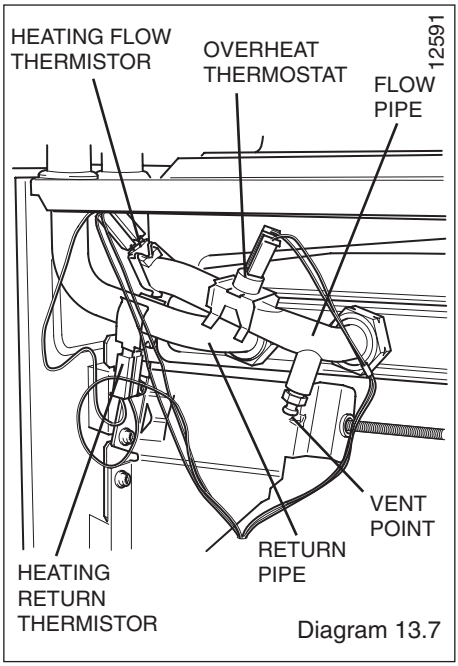

Diagram 13.7

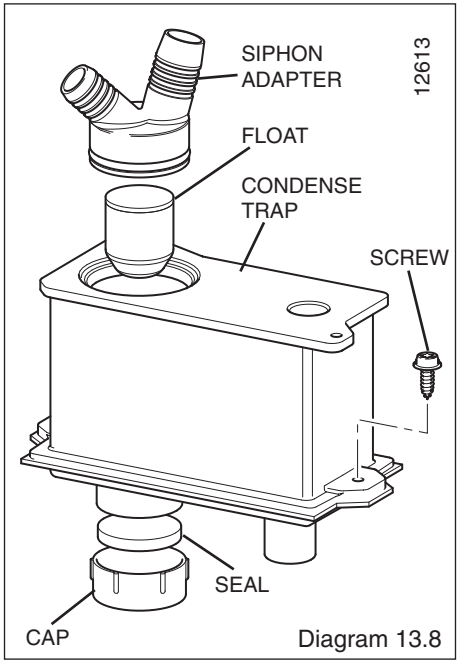

Diagram 13.8

Lift off the siphon adapter.

Remove the drain connection downstream of the condense trap.

Remove the two condense trap securing screws. Lift up and carefully remove the condense trap taking care not to spill any water which may be left in the unit. As the unit is lifted remove the flexible pipe on the outlet.

Remove the cap at the base of the condense trap.

Remove any solids found.

Before removing the float note it's orientation.

Remove the float to clean it.

Flush water through the trap to remove any remaining solids.

Check for any debris in the outlet pipe of the condensate drain and clean as necessary.

Reassemble and refit the condense trap.

When refitting the float, take care as it can be fitted the wrong way.

When refitting the cap ensure that a watertight seal is achieved, but do not use excessive force.

Using a suitable container, flush the heat exchanger until the water appears clear in the container. Reassemble siphon adapter.

13.17 Inner Casing Sealing Panel

Refer to section 11.7.

13.18 Access to Switches, User Interface and 230v controls Interface

For access, refer to section 13.1.

Release the front of the controls fascia by carefully prising up the two retaining latches, see diagram 11.7.

Do not allow the front of the fascia to swing down and be loosely held by the electrical connections to the mains reset switch and user interface. Either remove the connections or support the fascia.

13.19 Mains Reset Switch

Refer to section 13.18 for access.

Remove switch from housing, see diagram 13.9.

Remove electrical leads.

13.20 Mains Reset Slider

Refer to section 13.18 for access.

Remove slider by springing back retaining clip and pushing out from the back.

13.21 User Interface

Refer to section 13.18 for access and diagram 13.10.

Remove electrical plug.

Remove the three securing screws.

Withdraw the board.

When replacing the board refer to instructions supplied with replacement PCB on setting it up.

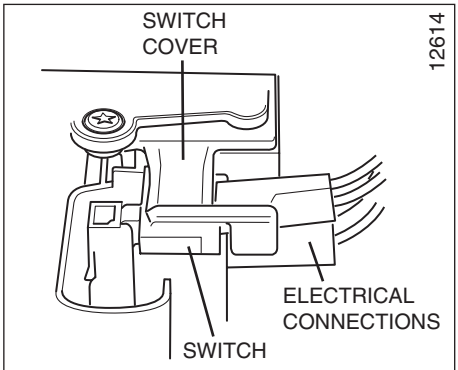

Diagram 13.9

Installation and servicing instructions strictly reserved for qualified gas installers

13.22 Main PCB

For access, refer to section 13.1

Hinge down the control box, see diagram 13.11.

Remove TORX screws and unhook the rear panel.

Remove the electrical connections to the PCB.

Prise back the two PCB retaining clips and withdraw the PCB.

When refitting the rear panel ensure the leads are not trapped.

13.23 Control Box

For access refer to section 13.22.

Remove relevant plugs and connectors, refer to wiring diagram 12.2.

Withdraw grommets and leads so they are hanging loose.

Unthread the retaining strap and remove the control box by drawing it outwards away from its retaining slots, see diagram 13.11.

13.24 Fuse - Main PCB - Control Box

For access, refer to section 13.22.

The fuse is located at bottom right hand side of the PCB, see diagram 12.2 or 13.1.

13.25 230V Controls Interface

For access, refer to section 13.18.

Disconnect the electrical connection from the 230V controls interface board and the electrical connection from the main PCB, see diagram 13.12.

Remove the 230V controls interface retaining screw.

Remove the 230V controls interface board.

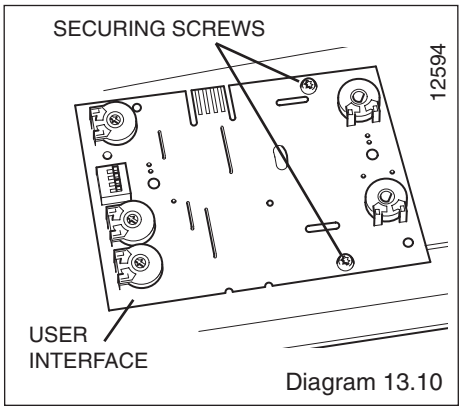

Diagram 13.10

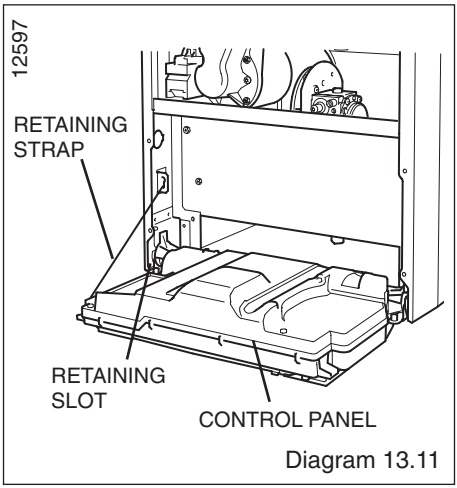

Diagram 13.11

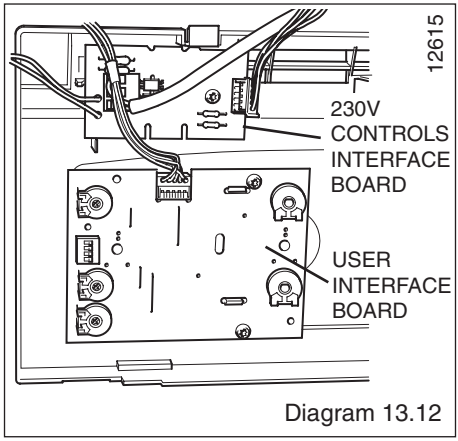

Diagram 13.12

SPARE PARTS

When ordering spare parts, contact Saunier Duval's own service organisation using the telephone number on the inside front cover of this booklet. Please quote the name of the appliance and serial number, to be found on the data label, see diagram 1.2.

If ordering from Saunier Duval also quote the G.C. number of the part.

Key No.	Part No.	Description	GC No
1	801645	Fan assembly	E84024
2	801637	Spark electrode	E83999
3	801655	Igniter unit	E84015
4	801649	Gas valve	E84004
5	801722	Heating flow & return thermistor (2)	E84003
6	801724	Overheat stat	E83996
7	4000124180	Main P.C.B.	E84019
8	801809	Mains Reset Switch	E84794
9	**********	User interface - 18 HE	*****
10	**********	User interface - 30 HE	*****
11	801632	Burner - 18 HE	E84021
12	2000801702	Burner - 30 HE	E84249
13	2000801923	230V Controls Interface	E84018

Because of our constant endeavour for improvement, details may vary slightly from those shown in these instructions.

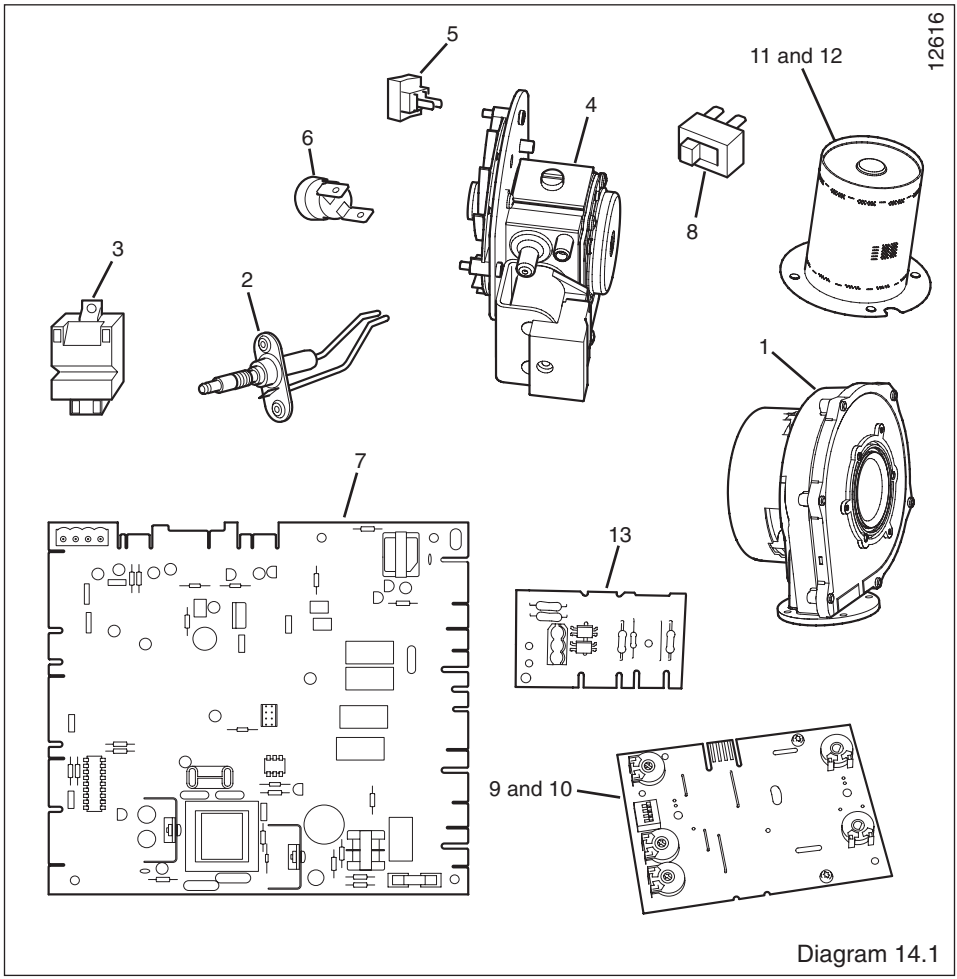

Diagram 14.1

manual part number 0020005496 -02/05

Saunier Duval

Saunier Duval, Nottingham Road
Belper,Derbyshire
DE56 1JT
Tel. 00 44 (0)1773 525914
Fax. 00 44 (0)1773 828070
www.saunier-duval.co.uk